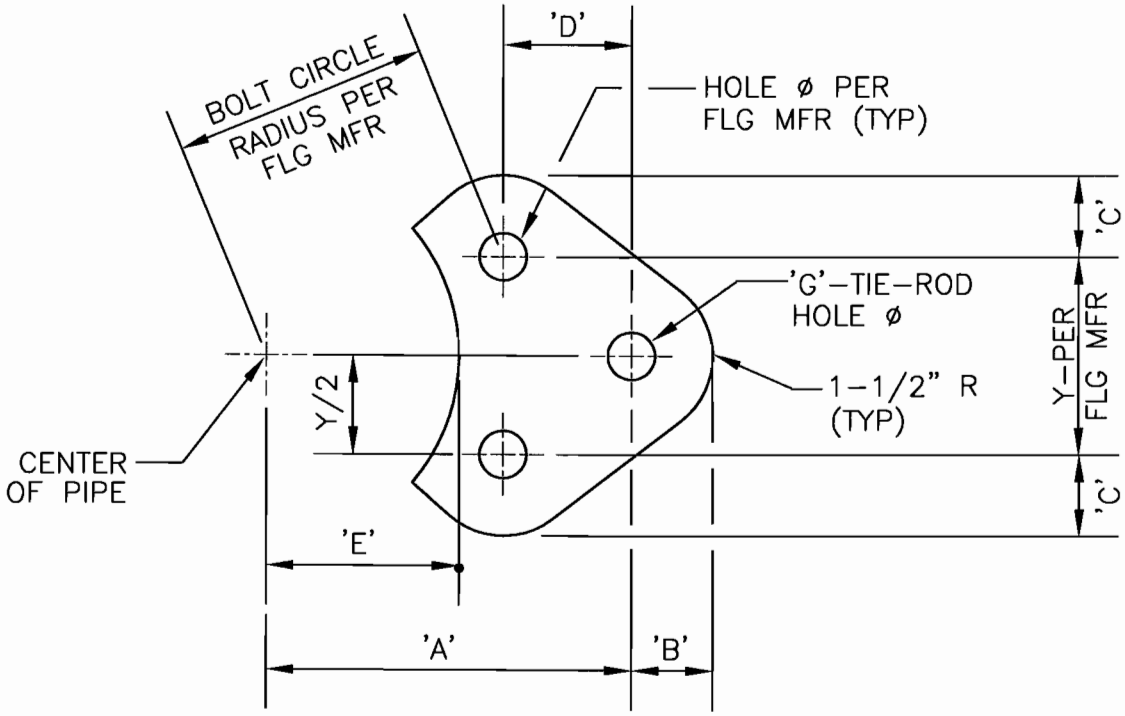

ENLARGED RESTRAINING PLATE

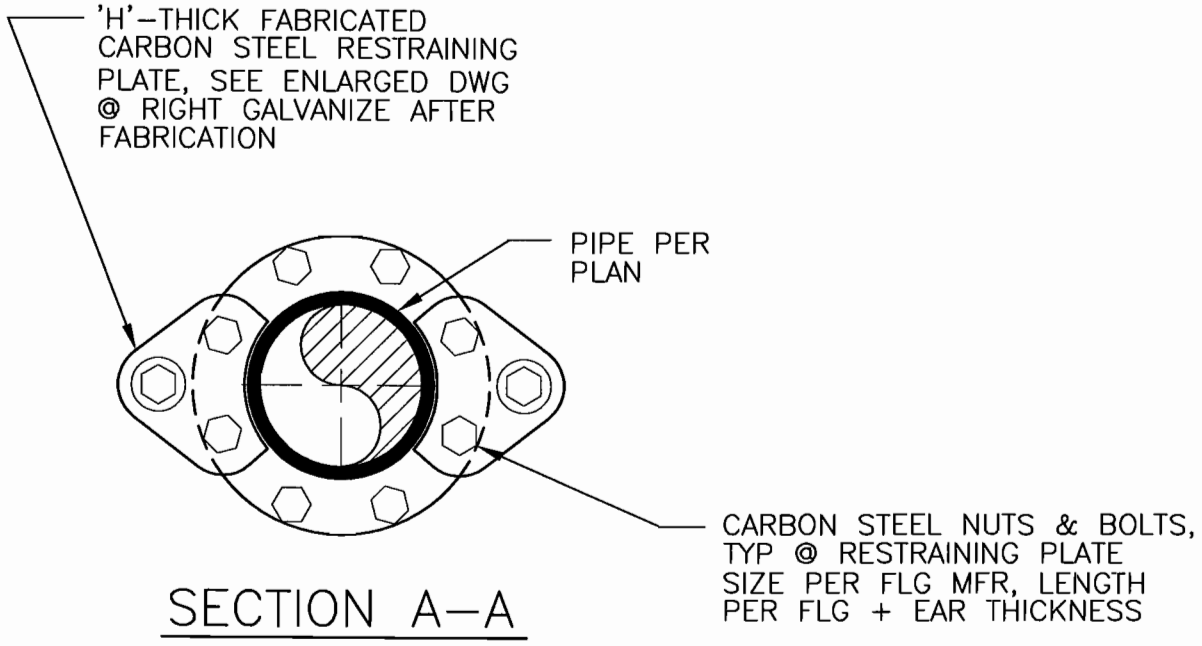

SECTION A-A

REVISION DATE: 3/22/2011

		SAN BERNARDINO MUNICIPAL WATER DEPARTMENT	DRAWING NUMBER
D.D.M.	MAR. 11	**RESTRAINED FLEXIBLE COUPLING RESTRAINT**	SBMWD
M.H.L.	FEB. 05		W6.27
REVISION	DATE	APPROVED MATTHEW H. LITCHFIELD, P.E. RCE 58079 DATE 10/11/11	SHEET 2 OF 2
SCALE:	NONE		