TB 1 TRAFFIC IMPACT BRACING DETAIL

CONNECT POSTS TO STEEL CAP BEAMS AS PER DETAIL "PC–1"

END KICKERS

* 1/8" FILLET WELDS MAY BE SUBSTITUTED WITH HEAVY DUTY C–CLAMP TORQUED TO 90 FT/LBS

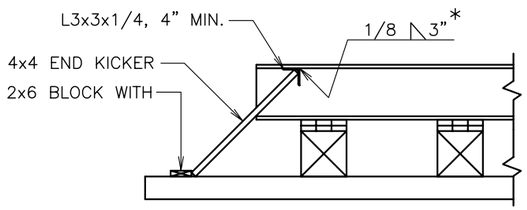

INSTALL 4x4 END KICKERS AT EACH END OF TRAFFIC BENTS

TRANSVERSE BRACING

OPTION #1

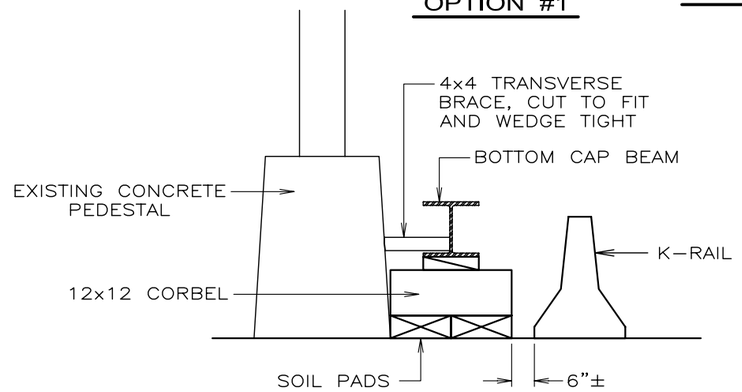

INSTALL 4x4 TRANSVERSE BRACE AT EACH END OF TRAFFIC BENTS

OPTION #2

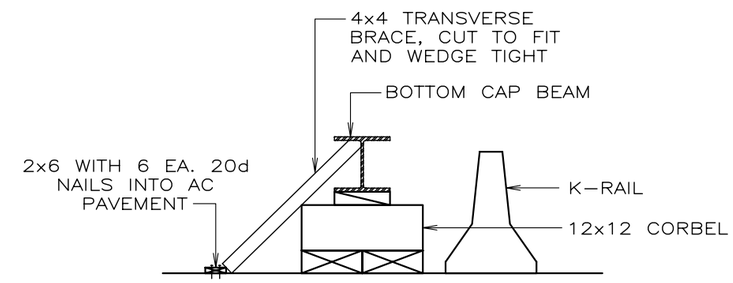

INSTALL 4x4 TRANSVERSE BRACE AT EACH END OF TRAFFIC BENTS

~ AREA LEFT BLANK INTENTIONALLY ~

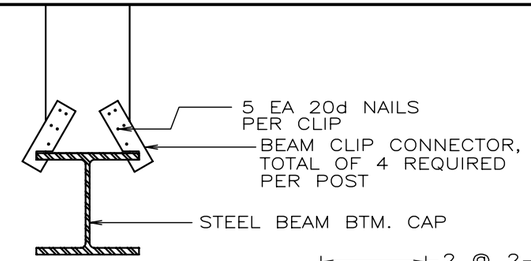

POST TO BTM. CAP CONNECTION

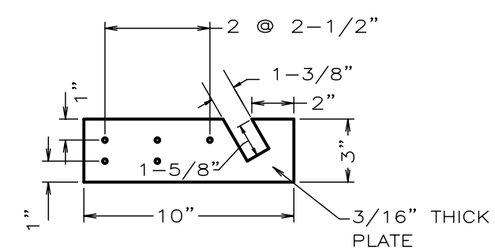

BEAM CLIP DETAILS

BC 1 BEAM CLIP DETAIL

1) THIS DETAIL MAY BE USED AT THE TOP & THE BTM. OF ALL POST.
2) THIS DETAIL IS AN OPTIONAL ERECTION AID FOR THE CONTRACTOR AND MAY BE ELIMINATED AT HIS DISCRETION

ERECTION PROCEDURE:

1) GRADE EXISTING GROUND WHERE REQUIRED AND PLACE SOIL PADS AND CORBELS.
2) BUILD BENT ON THE GROUND INCLUDING THE TOP CAP, BOTTOM CAP, POSTS AND LATERAL X–BRACING.
3) INSTALL WEB BLOCKING AS PER DETAIL "WB–1" DIRECTLY OVER THE LOCATION OF THE CENTER OF THE TEMPORARY SUPPORT BENT, PRIOR TO ERECTING THE BENT.
4) STAND PREFABRICATED PORTION OF THE BENT USING A CRANE OR OTHER HOISTING EQUIPMENT.
5) ONCE THE BENT HAS BEEN PLACED ON THE CORBELS AND PLUMBED PLACE A HYDRAULIC BOTTLE JACK UNDER EACH POST BETWEEN THE BTM. FLANGE OF THE BOTTOM CAP BEAM AND THE TOP OF THE SOIL PADS. JACK SHOULD BE SET ON A STEEL JACKING PLATE (12x12x3/4 MIN.) WHICH RESTS ATOP THE SOIL PADS.
6) JACK BENT UP EVENLY UNTIL THE TOP CAP BEAM IS SNUG AGAINST THE BOTTOM OF THE EXISTING STRINGER BEAMS. TAKE CARE NOT TO DAMAGE THE EXISTING STRUCTURE BY OVER JACKING THE BENT.
7) TIGHTEN WEDGES BETWEEN THE CORBELS AND THE BOTTOM FLANGE OF THE BOTTOM CAP BEAM. ONCE ALL WEDGES HAVE BEEN SET TIGHT, RELEASE THE HYDRAULIC PRESSURE ON THE JACKS. REMOVE JACKS AND STEEL JACKING PLATE.
8) INSTALL PERMANENT LONGITUDINAL BRACING PER DETAIL "LB–6" AT THE LOCATIONS INDICATED ON THE PLANS.

REGISTERED PROFESSIONAL ENGINEER
R. DEAN MORRIS
NO. C 48465
EXP. 6/2006
CIVIL
STATE OF CALIFORNIA

MORRIS ENGINEERING, INC.
2021 E. 4th Street, Santa Ana, California 92705
(714) 541-5874 Fax (714) 541-5876
rdmengineer@earthlink.net

REVISION:	SCALE: NONE
DATE: 06/14/04	JOB # 24031
BY: srg/jds	SHEET 8 OF 9

CLIENT: CITY OF SAN BERNARDINO

PROJECT: MT. VERNON BRIDGE - TEMPORARY SHORE

FILE: \City of San Bernardino\24031 Mt. Vernon Bridge\Mt Vernon Bridge.dwg