CHAPTER 19.06
COMMERCIAL ZONES

Section		Page
19.06.010	Purpose	II-19.06-1
19.06.020	Development Permitted and Conditionally Permitted Uses	II-19.06-4
19.06.025	Prohibited Uses	II-19.06-9
19.06.026	Marijuana Dispensaries, Prohibited Uses	II-19.06-11
19.06.030	Development Standards	II-19.06-12
19.06.040	Applicable Regulations	II-19.06-82

Table

06.01	Commercial Zones List of Permitted Uses	II-19.06-5
06.02	Commercial Zones Development Standards	II-19.06-13
06.03	Commercial and Industrial Zones Specific Standards	II-19.06-20

Guidelines

G19.06.050	Commercial Development Design Guidelines	II-G19.06-1

19.06.010 PURPOSE

1. The purpose of this Chapter is to achieve the following:

   A. Provide appropriate commercial areas for retail and service establishments, neighborhood convenience and office uses required by residents of the City in a manner consistent with the General Plan.

   B. Provide adequate space to meet the needs of commercial development, including off-street parking and loading.

   C. Minimize traffic congestion and avoid the overloading of utilities.

   D. Protect commercial areas from excessive noise, illumination, unsightliness, odor, smoke, and other objectionable influences.

   E. Promote high standards of site planning, and landscape design for commercial and office developments within the City.

   F. Provide employment opportunities for existing and future residents of the City and those of adjacent communities.

   G. Provide for land uses which meet the needs of and attract regional populations, in addition to local residents.

H. Ensure compatibility with adjacent land uses.

I. Single-family dwelling units which legally existed in commercial land use districts prior to June 3, 1991 may remain as a permitted use. MC 823 3/5/92

2. The purpose of the individual commercial zones is as follows: MC 1393 12/2/13

A. CO (COMMERCIAL OFFICE) ZONE

This zone is intended to provide for the continued use, expansion, and new development of administrative and professional offices, hospitals, and supporting retail uses in proximity to major transportation corridors and ensure their compatibility with adjacent residential and commercial uses. Additionally, this zone permits a maximum density of 47 units per net acre for senior citizen and senior congregate care housing. Existing single family residential structures may remain as a permitted use. MC 818 1/7/92, MC 1381 12/19/12

B. CG-1 (COMMERCIAL GENERAL) ZONE

This zone is intended to provide for the continued use, enhancement, and new development of retail, personal service, entertainment, office and related commercial uses along major transportation corridors and intersections to service the needs of the residents; reinforcing existing commercial corridors and centers and establishing new locations as residential growth occurs. Additionally, this zone permits a maximum density of 47 units per net acre for senior citizen and senior congregate care housing. MC 1304 5/4/09

C. CG-2 (COMMERCIAL GENERAL-2) ZONE

This zone is intended to enhance the economic activity of appropriate commercial corridors; infilling and intensifying existing development, establishing new key activity centers and nodes, allowing for the development of medium and medium high residential density as alternative uses. The residential development shall have a minimum contiguous area of one net acre with a maximum density of 12 units per net acre along Mount Vernon Avenue and Baseline Street and other designated locations west of I-215 and a maximum density of 21 units per net acre along Baseline Street and other designated locations east of I-215. Additionally, a bonus density of 50% for the development of senior citizen and senior congregate care housing shall be permitted, subject to the approval of a Conditional Use Permit. MC 1381 12/19/12

D. CG-3 (COMMERCIAL GENERAL-3) ZONE

This zone provides for the development of local and regional serving retail, personal service, entertainment, office and related commercial uses. This district includes, but is not limited to, properties adjacent to California State University at San Bernardino along North Park Boulevard, Kendall Drive, and University Parkway for commercial and personal service uses to meet the needs of students, faculty, and visitors, and

properties along Mt. Vernon Avenue, between 4th and 9th Streets, within the Paseo Las Placitas Specific Plan area.

Design guidelines for the Mount Vernon Corridor (Paseo Las Placitas) are contained in Chapter 19.10, Special Purpose Zones, Section 19.10.030(3). MC 1381 12/19/12

E. CR-1 (COMMERCIAL REGIONAL-MALLS) ZONE

This zone is intended to maintain and enhance the Inland Center Mall~~s~~ and adjacent properties to this and the Carousel Mall as the principal region-serving retail centers of the City. MC 1381 12/19/12

F. CR-2 (COMMERCIAL REGIONAL-DOWNTOWN) ZONE

This zone is intended to permit a diversity of regional-serving uses in the Downtown area including local, county, and state governmental/administrative, professional offices, cultural/historical and entertainment, convention facilities, hotels/motels, financial establishments, restaurants, supporting retail and services, educational institutions, public open spaces, and residential and senior citizen housing. Development of sites exclusively for residential uses shall have a minimum contiguous area of 1 net acre, with a maximum density of 47 units per net acre. Senior citizen and senior congregate care housing shall permit a maximum density of 130 units per net acre, subject to the approval of a Conditional Use Permit.

G. CR-3 (COMMERCIAL REGIONAL-TRI-CITY/CLUB) ZONE

This zone is intended to permit a diversity of regional-serving uses including corporate and professional offices, retail commercial, entertainment (theaters, nightclubs, etc.), financial establishments, restaurants (drive-thrus south of I-10 and adjacent to Tippecanoe Avenue between Hospitality Lane and I-10 only), hotels/motels, warehouse/promotional retail, supporting retail and services, and similar uses. MC 1098 7/5/01

H. CR-4 (COMMERCIAL REGIONAL-AUTO PLAZA) ZONE

This zone is intended to provide for the development of new and used automobile and truck sales and related retail and service uses in the Auto Plaza area.

I. CCS-1 (CENTRAL CITY SOUTH) ZONE

This zone is intended to permit general retail, professional office and medical types of uses. Standards are contained in Chapter 19.13. MC 1381 12/19/12

J. CCS-2 (CENTRAL CITY SOUTH) ZONE

This zone is intended to permit service commercial uses. Standards are contained in Chapter 19.13.

K. CCS-3 (CENTRAL CITY SOUTH-FLOOD CONTROL CHANNEL) ZONE

This zone is intended to provide for the flood control channel. Standards are contained in Chapter 19.13.

L. CH (COMMERCIAL HEAVY) ZONE

This zone is intended to accommodate automobile and truck sales and repair facilities, lumberyards, and related hardware sales, plant nurseries, light industrial manufacturing and storage facilities, and similar uses requiring extensive outdoor or indoor space for their sales, service, and/or storage, excluding neighborhood commercial uses.

19.06.020 DEVELOPMENT PERMITTED AND CONDITIONALLY PERMITTED USES

Table 06.01 represents those uses in the commercial zones which are subject to a Development Permit (D) or Conditional Use Permit (C). MC 888 1/6/94

TABLE 06.01
COMMERCIAL ZONES LIST OF PERMITTED, DEVELOPMENT PERMITTED AND CONDITIONALLY PERMITTED USES

The following list represents those primary uses in the commercial zones, which are Permitted (P), subject to an Administrative or Development Permit (D), or a Minor/Conditional Use Permit (C). Those with a -- are not permitted uses in that zone. MC 1381 12/19/12

	LAND USE ACTIVITY	CO	CG-1	CG-2	CG-3	CR-1	CR-2	CR-3	CR-4	CH	CCS-1	CCS-2
A.	Administrative & Professional Offices/Services Commercial Establishments where the administrative, clerical and managerial functions of a business of industry are conducted or where members of a profession conduct their practice (e.g., accounting or engineering)	D	D	D	D	D	D	D	--	D	D	D
B.	Assembling, Processing Facilities Establishments, which perform the assembling, cleaning, manufacturing, processing, repairing or testing of products and welding and excluding explosives, conducted entirely within an enclosed structure	--	--	--	--	--	--	--	--	D	--	--
C.	Automotive-Related Uses Commercial establishments, which provide parts, repair, sale and service for autos, RVs and trucks. Examples of allowable land use activities include, but are not limited to, the following:											
	1. Auto Parts Sales – No Installations	--	D	D	D	D	D	--	D	D	D	D
	2. Auto Parts Sales – With Installations	--	D	D	D	D	D	--	D	D	--	D
	3. Auto Repair (e.g., bodywork, engine and drive train, painting and misc. work)	--	C	C	--	C	--	--	C	C	--	C
	4. Car, RV and Truck Sales – New	--	D	D	--	D	--	C	D	D	D	D
	5. Car, RV and Truck Sales – Used	--	C	C	--	C	--	C	D[1]	C	C	C
	6. Car Washes	--	C	C	C	--	--	--	D	C	--	C
	7. Impound Vehicle Storage Yards	--	--	--	--	--	--	--	--	C	--	--
	8. Service Stations	C	C	C	C	C	C	C	C	C	C	--
	9. Vehicle Leasing/Rental	--	D	D	D	--	D	--	D	D	D	D
D.	Boarding/Lodging Facilities Commercial establishments, which provide boarding, camping spaces/facilities, and lodging (with or without meals). Examples of allowable land use activities include, but are not limited to, the following:											
	1. Boarding Houses	--	--	C	--	--	C	--	--	--	--	--
	2. Fraternities/Sororities	--	--	--	C	--	--	--	--	--	--	--
	3. Hotels/Motels	--	C	C	--	--	C	C	--	--	C	--

	LAND USE ACTIVITY	CO	CG-1	CG-2	CG-3	CR-1	CR-2	CR-3	CR-4	CH	CCS-1	CCS-2
	4. RV Parks	--	C	C	--	--	--	--	--	C	--	--
	5. Single Room Occupancy (SROs)	--	--	C	--	--	C	--	--	--	--	--
	6. Extended Lodging Facilities (MC 1126 7/4/02)	--	--	--	--	--	C	C	--	--	--	--
E.	Eating/Drinking Establishments Commercial establishments, which serve prepared food or beverages for consumption on or off the premises. Examples of allowable land use activities include, but are not limited to, the following:											
	1. Night Clubs/Bars/Lounges	--	C	C	C	C	C	C	--	--	C	--
	2. Restaurants – No Drive-Thru	D	D	D	D	D	D	D	--	D	D	D
	3. Restaurants – With Drive-Thru	--	C	C	C	--	C[2]	C[3]	--	--	--	--
	4. Restaurants – Take-Out Only (No seats)	D	D	D	D	D	D	D	--	D	D	D
F.	Entertainment/Recreation Commercial establishments, which provide participant/spectator amusement, entertainment or sport, primarily for financial gain. Examples of allowable land use activities include, but are not limited to, the following:											
	1. Adult Entertainment	--	--	--	--	--	--	--	--	D	--	--
	2. Auditoriums, Convention Halls and Theaters	C	C	C	C	C	C	C	--	C	C	C
	3. Banquet Halls	C	C	C	C	C	C	C	--	C	C	C
	4. Movie Theaters [4]	C	C	C	C	C	C	C	--	C	C	C
	5. Miscellaneous Indoor	D	D	D	D	D	D	D	--	D	D	D
	6. Miscellaneous Outdoor	C	C	C	C	C	C	C	--	C	C	C
G.	Financial Commercial establishments, which engage in monetary transaction not directly related to the sale of a product/service	D	D	D	D	D	D	D	--	D	D	D
H.	Medical/Care Facilities/Social Services Commercial establishments, which provide services of a medical/care nature, related to the health and welfare of the City's residents. Examples of allowable land use activities include, but are not limited to, the following:											
	1. Blood Banks	C	C	--	--	--	--	--	--	--	--	--
	2. Emergency Shelters	--	--	--	--	--	C	--	--	C	--	--
	3. Health Clinics/Outpatient Surgery	D	D	D	D	D[5]	D	D	--	--	D	--
	4. Medical Offices	D	D	D	D	D	D	D	--	D	D	D
	5. Hospitals	C	C	--	--	--	--	--	--	--	--	--
	6. Outpatient – Treatment Programs	C	C	C	--	--	--	--	--	--	D	--
	7. Residential Care Facilities	C	C	C	--	--	C	--	--	--	--	--

	LAND USE ACTIVITY	CO	CG-1	CG-2	CG-3	CR-1	CR-2	CR-3	CR-4	CH	CCS-1	CCS-2
	8. Senior/Congregate Care Facilities	C	C	C	--	--	C	--	--	--	--	--
	9. Social Services Centers	C	C	C	C	--	C	C	--	--	--	--
I.	Personal Service Commercial establishments, which provide needed services of a personal nature. Examples of allowable land use activities include, but are not limited to, the following:											
	1. Barber/Beauty/Nail Shops	D	D	D	D	D	D	D	--	--	D	D
	2. Dance Schools/Karate Studios	D	D	D	D	D	D	D	--	--	D	D
	3. Dry Cleaners	D	D	D	D	D	D	D	--	D	--	D
	4. Health/Athletic Clubs	D	D	D	D	D	D	D	--	--	D	D
	5. Laundromats (self-serve)	--	D	D	D	--	D	--	--	--	--	D
J.	Retail Commercial Commercial establishments, which sell merchandise generally needed/desired by the community. Examples of allowable land use activities include, but are not limited to, the following:											
	1. Convenience Stores	--	C	C	C	--	--	--	--	--	--	--
	2. Drug Stores	D	D	D	D	D	D	D	--	D	D	D
	3. Flower/Gift Shops	D	D	D	D	D	D	D	--	D	D	D
	4. General Merchandise (including Supermarkets)	--	D	D	D	D	D	D	--	D	D	D
	5. Home Improvements with Outdoor Display of Lumber, Garden and Nursery Items	--	D	D	D	--	--	D	--	D	--	--
	6. Indoor Retail Concession Malls	--	C	C	--	--	--	--	--	C	--	--
	7. Liquor Stores	--	C	C	C	C	C	C	--	--	C	C
	8. Medical Equipment and Supplies	D	D	D	--	D	D	--	--	--	--	--
	9. Mini-Malls	--	C	C	C	--	--	C	--	--	C	--
	10. Mobile Home Sales	--	D	D	D	--	D	D	D	D	--	D
	11. Neighborhood Grocery Stores (with or without alcohol sales) (MC 1093 4/5/01)	--	C	C	C	--	C	--	--	C	--	--
	12. Nurseries/Garden Supplies	--	D	D	D	D	--	D	--	D	D	D
	13. Office Supplies/Equipment	D	D	D	D	D	D	D	--	D	D	D
	14. Specialty Food Stores (no alcohol sales)	D	D	D	D	D	D	D	--	D	D	D
K.	Service Commercial Commercial establishments, which store large inventories of goods typically in industrial-style structures where goods are not produced on the site, but are offered for sale. Examples of allowable land use activities include, but are not limited to, the following:											
	1. Catering Establishments	--	D	D	--	--	D	D	--	D	D	D
	2. Cleaning/Janitorial	--	D	D	--	--	D	D	--	D	D	D

	LAND USE ACTIVITY	CO	CG-1	CG-2	CG-3	CR-1	CR-2	CR-3	CR-4	CH	CCS-1	CCS-2
	3. Copy Centers/Postal Service Centers and Blueprinting	D	D	D	D	D	D	D	--	D	D	D
	4. Equipment Rental/Sales/Service Yard	--	--	--	--	--	--	--	--	D	--	--
	5. Laboratories (e.g., Film, Medical and Dental, "R&D", etc.)	D	D	D	D	D	D	D	--	D	D	D
	6. Misc. Repairs/Services (indoors only)	--	D	D	D	D	D	D	--	D	D	D
	7. Publishing/Printing Plants	--	--	--	--	--	D	--	--	D	D	D
	8. Recycling Facilities	D[6]	D[6]	D[6]	D[6]	D[6]	D[6]	D[6]	D[6]	D[6]	D[6]	D[6]
	9. Recycling Facilities (reverse vending only)	D	D	D	D	D	D	D	--	D	D	D
	10. Veterinary Services – Animal Boarding	--	C	C	--	--	--	--	--	C	--	C
	11. Veterinary Services – No Animal Boarding	--	D	D	--	--	--	--	--	D	--	--
	12. Welding and Related Uses	--	--	--	--	--	--	--	--	D	--	--
L.	Other											
	1. Antennae/Satellite Dish	D	D	D	D	D	D	D	D	D	D	D
	2. Bakeries (Commercial)	--	--	D	--	--	--	--	--	--	D	D
	3. Cable Companies	--	D	--	--	--	--	--	--	D	--	--
	4. Clubs, Lodges and Meeting Halls	D	D	D	--	D[7]	D	D	--	D	D	D
	5. Combination Residence/Office[8]	C	--	--	--	--	--	--	--	--	--	--
	6. Day Care Facilities	C	D	D	D	D	D	D	D	D	D	D
	7. Educational Services (except Trade/Tech)	--	C	C	--	D[7]	C	--	--	D	--	--
	8. Fences/Walls	D	D	D	D	D	D	D	D	D	D	D
	9. Fuel Dealers	--	--	--	--	--	--	--	--	C	--	--
	10. Funeral Parlors/Mortuaries	--	C	C	--	--	--	--	--	--	--	--
	11. Heliports/Helipads	C	C	--	--	--	--	C	--	C	--	--
	12. Libraries	D	D	D	D	D	D	D	--	D	D	D
	13. Mini-storage	--	C[9]	--	--	--	--	--	--	--	--	--
	14. Mixed-Use (excluding residential)	D	D	D	D	D	D	D	--	D	D	--
	15. Mixed-Use Commercial and Residential Development (including Artist Colony and combination residence/office)	D	D	D	D	D	D	D	--	--	D	--
	16. Multi-Family Housing	--	--	D[10]	--	--	D	--	--	--	--	--
	17. Museums	D	D	D	D	D	D	D	--	D	D	D
	18. Office Conversion from Single-Family Residential	D[11]	D	D[11]	D	D	D	D	--	D	D	D
	19. Parking Lots	D	D	D	D	D	D	D	D	D	D	D
	20. Parking Structures	D	--	--	--	D	D	D	--	--	--	--
	21. Pipelines (as defined by Section 19.20.030.12.E or as superseded by State or Federal law)	C	C	C	C	C	C	C	C	C	C	C
	22. Police/Fire Protection	D	D	D	D	D	D	D	D	D	D	D
	23. Public Utility Uses	D	D	D	D	D	D	D	D	D	D	D
	24. Radio/Television Broadcasting	--	D	--	--	D[12]	D	--	--	D	D	D
	25. Religious Facilities	--	C	C	C	C	C	C	--	C	C	C

LAND USE ACTIVITY	CO	CG-1	CG-2	CG-3	CR-1	CR-2	CR-3	CR-4	CH	CCS-1	CCS-2
26. Single-Family Residential (existing)	P	P	P	P	P	P	P	P	P	P	P
27. Swap Meets	--	--	--	--	--	--	--	--	C	--	--
28. Temporary Uses (subject to [T] Temporary Use/Special Use Permit	T	T	T	T	T	T	T	T	T	T	T
29. Trade/Tech Schools	C	D	D	--	D[12]	D	D	--	--	D	--
30. Transit Center	--	--	--	--	--	--	--	--	--	D	--
31. Winery/Microbrewery	--	C	C	C	C	C	C	--	C	C	C

[1] Used vehicle sales may only be in conjunction with a "new" sales dealer.
[2] Only on properties in the Freeway Corridor Overlay District with frontage on 5th Street. MC 1338 11/15/10
[3] South of I-10 and adjacent to Tippecanoe Avenue, between Hospitality Lane and I-10 only. MC 1098 7/5/01
[4] Project with any single theater (regardless of others) having auditoriums of 3,000 square feet or less and 200 seats or fewer unless exempt by Development Agreement in place by February 22, 2012. Applies to theaters established after February 22, 2012.
[5] MC 1115 3/7/02
[6] Must be in compliance with Section 19.06.030(2)(Q)
[7] MC 1115 3/7/02
[8] MC 1218 3/6/06
[9] MC 1035 12/17/98
[10] Requires approval by Council
[11] Refer also to Table 06.03
[12] MC 1115 3/7/02

19.06.025 PROHIBITED USES MC 1233 10/2/06

1. Notwithstanding any conflicting provision(s) in any other section of the San Bernardino Municipal Code, including the Development Code, no Conditional Use Permit, Development Permit, Building Permit, Certificate of Occupancy, or Zoning Verification Review (also referred to as "Zoning Consistency Review"), shall be issued or granted for the establishment of a new business, or the relocation of an existing business, in the City of San Bernardino within the following categories of commercial uses:

   A. Smoke Shops – Establishments that either exclusively or as a substantial portion (+50%) of their floor area, sell cigarettes, cigars, pipes, bongs, tobacco, and related paraphernalia.

   B. Single-price overstock/discount store – Establishments that sell a broad range of outlet, close-out, discontinued, liquidation, or overstock merchandise, and primarily at a single discount price in the low and very low price ranges, including but not limited to food stuffs, alcoholic beverages, apparel and accessories, costume jewelry, notions and wares, housewares, fountain refreshments, and toys. This category shall not include single-price overstock discount stores containing a minimum floor area of 9,000 square feet in size and approved under a Conditional Use Permit. MC 1367 12/07/11

   C. Tattoo Parlors and/or Body Piercing Studios – Establishments that engage in any method of placing permanent designs, letters, scrolls, figures, symbols, or any other marks upon or under the skin with ink or any other substance, by the aid of needles or any other instruments designed to touch or puncture the skin, resulting in either the coloration of the skin, or the production of scars or scarring and/or

establishments that create an opening in the body of a person for the purpose of inserting jewelry or other decoration. This category shall not include licensed physicians, nurses, electrologists, and cosmetologists and shall also not include jewelry stores that offer ear piercing.

D. Second Hand Stores/Thrift Stores – Establishments that sell used merchandise such as clothing and shoes, household furniture, home furnishings and appliances, books and magazines, office furniture, used musical instruments, used phonographs and records, used fixtures and equipment, including re-sale shops, consignment shops, and similar businesses. This category shall not include the following:

1. Stores owned or operated by existing entities recognized as non-profit by the Secretary of State of the State of California, and in "good status" with the same.

2. Antique Stores – An antique, for the purposes of this ordinance, shall be a work of art, piece of furniture, decorative object, or the like, of or belonging to the past, and at least 50 years old. This includes any premise used for the sale or trade of articles of which 90% or more are over 50 years old or have collectible value.

3. Existing, legally established indoor concession malls and outdoor swap meets, unless otherwise prohibited.

E. Check-Cashing, Cash Advance, and Loan Facilities – Establishments that engage, in whole or in part, in the business of cashing checks, warrants, drafts, money orders, or other commercial paper serving the same purpose, such facilities do not include a state or federally chartered bank, savings and loan association, credit union, or industrial loan company.

1. This category shall include any business licensed by the California Commissioner of Corporations to make deferred deposit transactions pursuant to *California Financial Code* Section 23000 *et seq.*, sometimes referred to as "payday advance," "cash advance," or "payday loan" services.

2. This category shall not include any ancillary check-cashing facility that is located entirely within a major retailer over 15,000 square feet in size.

F. Convenience Stores (if located within a one mile radius or another convenience store) – The retail sale of groceries, staples, sundry items, and/or alcoholic beverages where the gross floor area is less than 5,000 square feet. This category shall not include any convenience store located on the same parcel with an automobile service station.

G. Pawn Shops – Businesses that loan money or other items of value to any person, firm or corporation, upon any personal property, personal security or the purchasing of personal property and reselling or agreeing to resell such articles at prices previously agreed upon. This category shall not include any legally established

pawnshop in an unreinforced masonry building to be relocated to another building within 50 feet of the current location.

H. Automotive Stereo Shops – Establishments that either exclusively or as a substantial portion (+50%) of their floor area, sell and install automotive stereos and accessories. This category shall not apply to the establishment of a new Automotive Stereo shop in the Auto Center Plaza area.

I. Tire Stores – Establishments less than 5,000 square feet in size which sell new and/or used automobile tires and accessories. This category shall not include legally established service stations and auto repair facilities.

J. Self-service Laundry – Any commercial establishment providing the use of self-service washing machines and dryers to the public, usually coin-operated. This category shall not include self-service laundries approved under a Conditional Use Permit to be established in a multi-tenant center of at least 20,000 square feet. MC 1367 12/07/11

K. Recycling Center – Small collection facilities which occupy an area of less than 500 square feet, and which accept by donation, redemption or purchase, recyclable materials from the public, unless required as a Certified Recycling Center by the California Public Resources Code, or donation drop boxes operated by a valid non-profit organization. MC 1381 12/19/12

L. Party Supply Stores – Establishments that either exclusively or as a substantial portion of their floor area, sell or rent party supplies and equipment. This category shall not include party supply stores of at least 2,500 square feet and located in a multi-tenant center of at least 20,000 square feet, or party supply stores established in a single-tenant building of at least 10,000 square feet of floor area; and approved under a Conditional Use Permit. MC 1367 12/07/11

2. Section 19.06.025(1) shall not apply to any of the enumerated uses if established in a shopping center or mall containing over 200,000 square feet of floor area and that have at least one major commercial-anchor-tenant.

3. Section 19.06.025(1) shall not apply to any of the enumerated uses if that use is exclusively established in single independent building exceeding 25,000 square feet in size

19.06.026 MEDICAL MARIJUANA DISPENSARIES, PROHIBITED USES

MC 1328 6/21/10

1. Notwithstanding any conflicting provision(s) in any other section of the San Bernardino Municipal Code, including the Development Code, no Conditional Use Permit, Development Permit, Building Permit, Certificate of Occupancy or Zoning Verification Review (also referred to as "Zoning Consistency Review") shall be issued or granted for the establishment or operation of a medical marijuana dispensary or similar use.

2. As used in this section, the following definitions apply:

A. "Marijuana" means all parts of the plant Cannabis Sativa L., whether growing or not; the seeds thereof; the resin extracted from any part of the plant; and every compound manufacture, salt, derivative, mixture, or preparation of the plant, its seeds or resin. It includes marijuana infused in foodstuff. It does not include the mature stalks of the plant, fiber produced from the stalks, oil or cake made from the seeds of the plant, any other compound, manufacture, salt, derivative, mixture, or preparation of the mature stalks (except the resin extracted therefrom), fiber, oil, or cake, or sterilized seeds of the plant which is incapable of germination; as the same is defined in California Health and Safety Code Section 11018.

B. "Medical marijuana dispensary" means any business, association, cooperative, club, co-op, delivery service, collective, and any other similar use involved in the sale, possession, cultivation, use, and/or distribution of marijuana for medicinal purposes; sometimes referred to as a "medical marijuana clinic."

19.06.030 DEVELOPMENT STANDARDS

1. GENERAL STANDARDS

A. The following standards are minimum unless stated as maximum. See Table 06.02.

B. COMMERCIAL LAND USE DISTRICT STANDARDS

The following standards shall apply to development in all commercial districts, except as otherwise provided for in this Development Code:

The following standards shall apply to development in all commercial zones, except as otherwise provided for in this Development Code:

1. All indoor uses shall be conducted within a completely enclosed structure. Limited outside uses (e.g. patio dining areas and nursery sales limited to plants and trees) or permanent outdoor sales and display areas, for major tenants (15,000 sq. ft. or greater) shall be approved with a Development Permit. Temporary outdoor sales and displays are permitted pursuant to Chapter 5.22 of the Municipal Code. MC 972 7/4/96

2. Outside storage, which shall be limited to within cargo containers only, shall be confined to the rear of the principal structure(s) or the rear two-thirds of the site, whichever is the more restrictive, and screened from public view from any adjoining properties and public rights-of-way by appropriate walls, fencing and landscaping and shall be approved with a Development Permit. No storage shall occur on any vacant parcel. Building materials for use on the same premises may be stored on the parcel during the time that a valid building permit is in effect for construction. MC 1393 12/2/13

3. Every parcel with a structure shall have a trash receptacle on the premises. The trash receptacle shall comply with adopted Public Works Department

standards and be of sufficient size to accommodate the trash generated. The receptacle(s) shall be screened from public view on at least three sides by a solid wall six feet in height and on the fourth side by a solid gate not less than five feet in height. The gate shall be maintained in working order and shall remain closed except when in use. The wall and gate shall be architecturally compatible with the surrounding structures.

4. All roof-mounted air conditioning or heating equipment, vents or ducts shall not be visible from any abutting lot, or any public street or right-of-way. This shall be accomplished through the extension of the main structure or roof or screened in a manner which is architecturally integrated with the main structure(s).

5. Elevations of all structures shall be architecturally treated to ensure compatibility with high quality neighboring structures.

6. An intensity bonus of up to 12 square feet for each 1 square foot of permanent space for properly designed and administered day care facilities may be approved by the review authority.

TABLE 06.02 COMMERCIAL ZONES DEVELOPMENT STANDARDS

DEVELOPMENT STANDARDS	CO	CG-1	CG-2	CG-3	CR-1	CR-2	CR-3	CR-4	CH	CCS-1	CCS-2
Net Lot Area[1]	10,000	10,000	10,000	10,000	0	0	10,000	1 ac.	10,000	10,000	1 ac.
Front Setback	15	10	10	15	0	0	15	20	10	20	10
Rear Setback	10	0[2]	0[2]	0[2]	0	0	10	0	0	10	10
Side Setback (Each)	10	0[2]	0[2]	0[2]	0	0	10	5	0	10	10
Side Setback (Street Side)	10	10	10	10	0	0	10	20	10	10	10
Lot Coverage (Maximum %)	50	50	50	50	75	100	75	75	75	50	75
Structure Height (Maximum)/Feet	4 st.[3]/ 52	2 st.[4]/ 30	2 st./ 30	2 st./ 30	4 st./ 52	100[4]	4 st.[5]/ 52	2 st./ 30	45	2 st.[5]/ 30	2 st.[5]/ 50

st. = story
ac. = acre

[1] This standard is only required for new commercial and industrial subdivisions
[2] Except if adjacent to any Residential Land Use District, where the minimum side or rear setback shall be 10 feet.
[3] Except withn 75 feet of any Residential Land Use District, the maximum height is 2 stories or 30 feet.
[4] Except additional height may be allowed as provided as bonus height provision of Section 19.06.030(2)(E).
[5] May exceed this height with a Conditional Use Permit, pursuant to Section 19.36. In CG-1, the site must abut a freeway
MC 1381 12/19/12

CCS-1 was added with MC 941 on 6/6/95

SITE DEVELOPMENT STANDARDS
CO (COMMERCIAL OFFICE) ZONE

MIN. LOT AREA: 10,000 SQUARE FEET
MAX. LOT COVERAGE: 50%

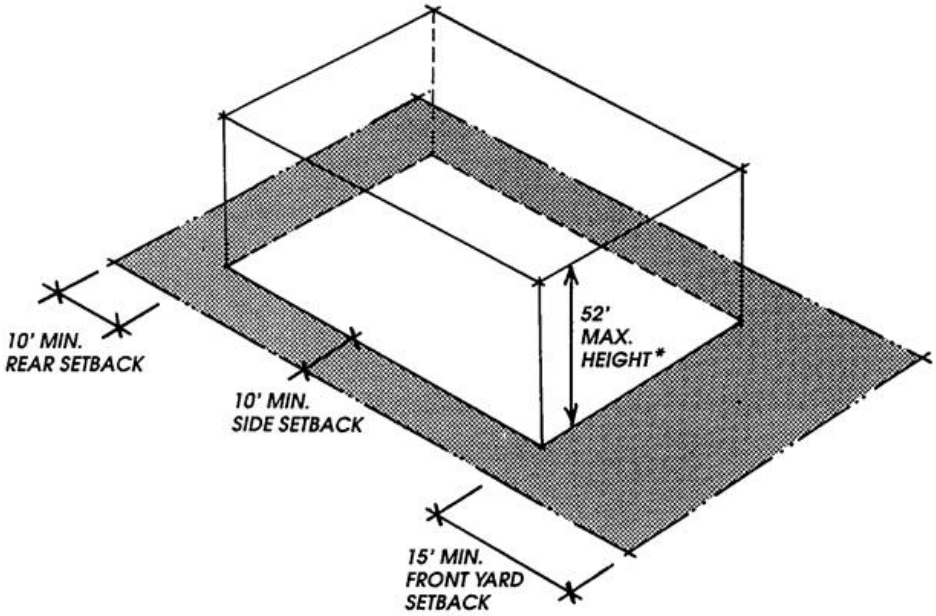

** WITHIN 75' OF ANY RESIDENTIAL LAND USE DISTRICT, THE MAX. HEIGHT IS 2 STORIES OR 30'*

SITE DEVELOPMENT STANDARDS
CG-1 (COMMERCIAL GENERAL) ZONE

MIN. LOT AREA: 10,000 SQUARE FEET
MAX. LOT COVERAGE: 50%

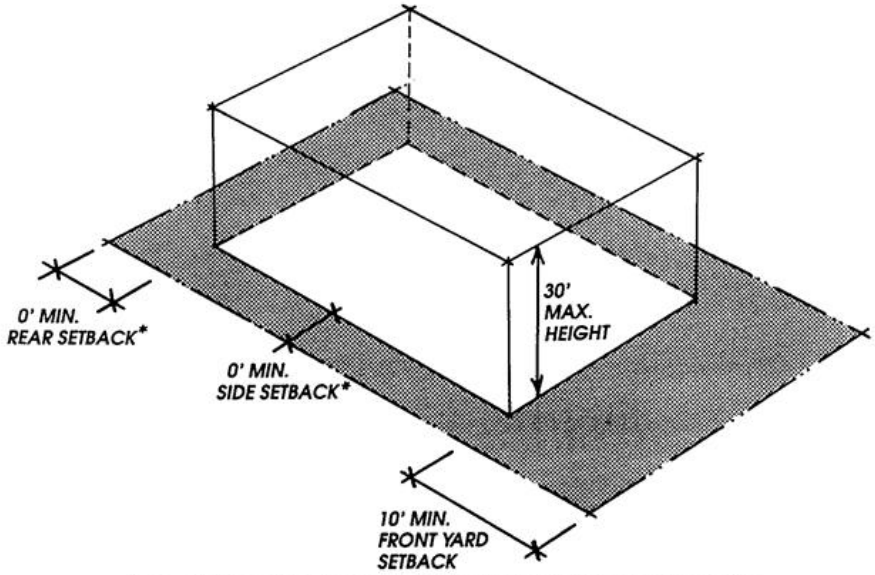

** EXCEPT IF ADJACENT TO A RESIDENTIAL LAND USE DISTRICT, THE MINIMUM SIDE OR REAR SETBACK SHALL BE 10 FEET.*

SITE DEVELOPMENT STANDARDS
CG-2 (COMMERCIAL GENERAL-2) ZONE

MIN. LOT AREA: 10,000 SQUARE FEET
MAX. LOT COVERAGE: 50%

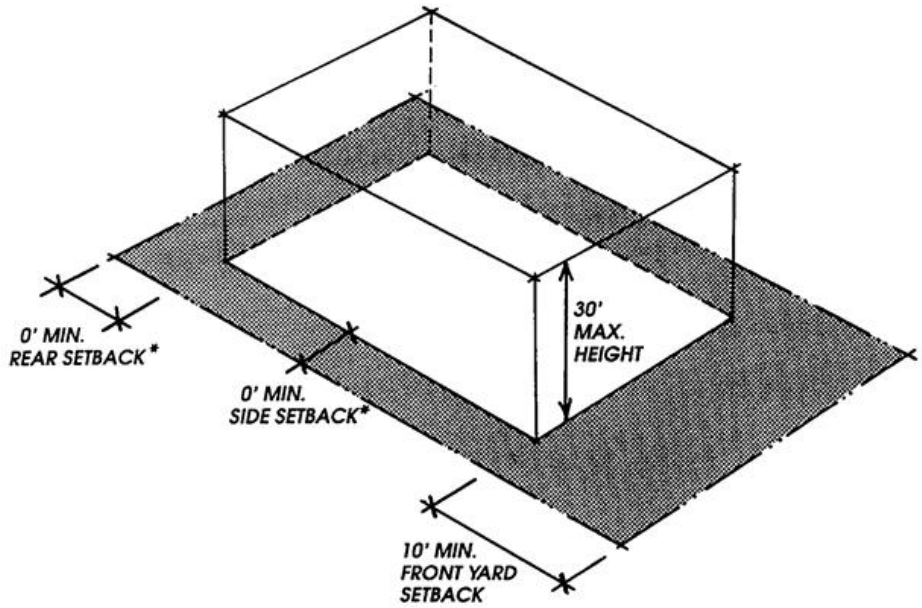

** EXCEPT IF ADJACENT TO A RESIDENTIAL LAND USE DISTRICT, THE MINIMUM SIDE OR REAR SETBACK SHALL BE 10 FEET.*

SITE DEVELOPMENT STANDARDS
CG-2 (COMMERCIAL GENERAL-3) ZONE

MIN. LOT AREA: 10,000 SQUARE FEET
MAX. LOT COVEERAGE: 50%

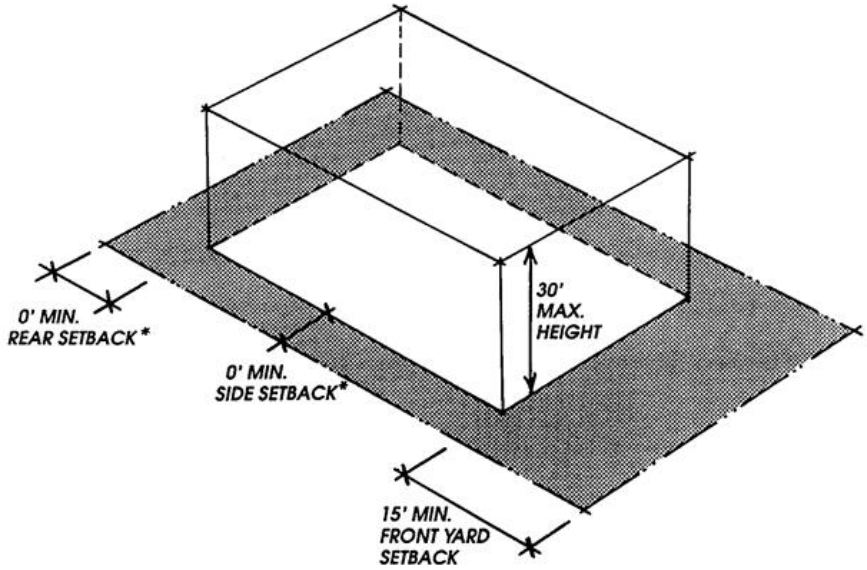

** EXCEPT IF ADJACENT TO A RESIDENTIAL LAND USE DISTRICT, THE MINIMUM SIDE OR REAR SETBACK SHALL BE 10 FEET.*

SITE DEVELOPMENT STANDARDS
CR-1 (COMMERCIAL REGIONAL-MALLS) ZONE

NO MIN. LOT AREA REQUIRED
MAX. LOT COVERAGE: 75%

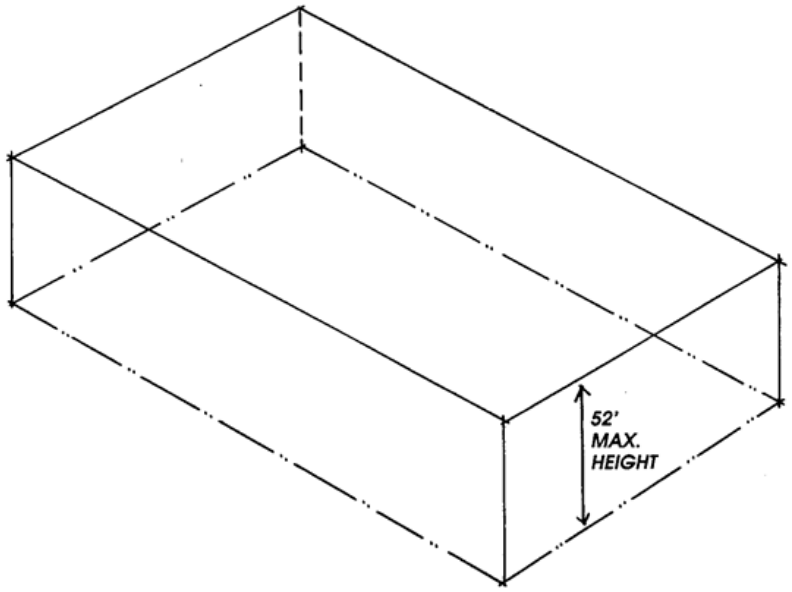

SITE DEVELOPMENT STANDARDS
CR-2 (COMMERCIAL REGIONAL-DOWNTOWN) ZONE

NO MIN. LOT AREA REQUIRED
MAX. LOT COVERAGE: 100%

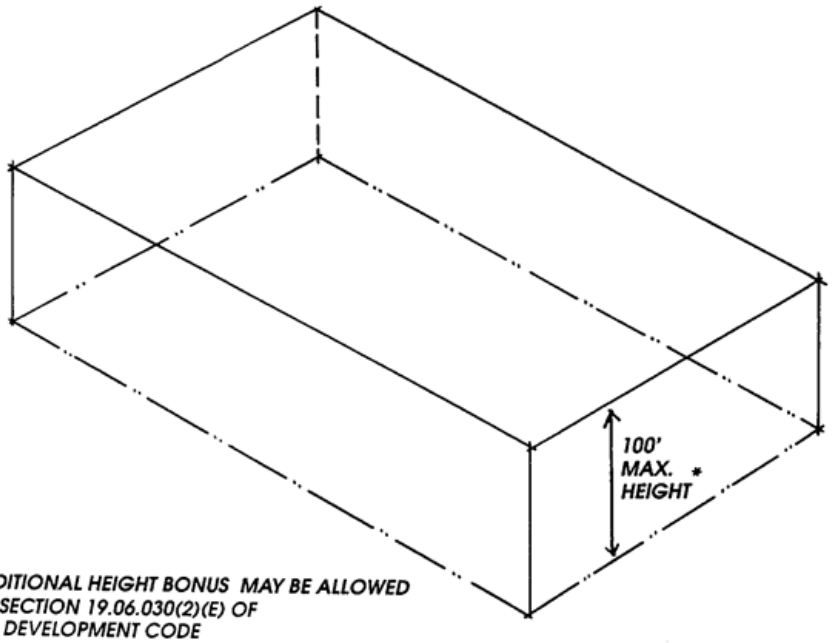

** ADDITIONAL HEIGHT BONUS MAY BE ALLOWED PER SECTION 19.06.030(2)(E) OF THIS DEVELOPMENT CODE*

SITE DEVELOPMENT STANDARDS
CR-3 (COMMERCIAL REGIONAL-TRI-CITY/CLUB) ZONE

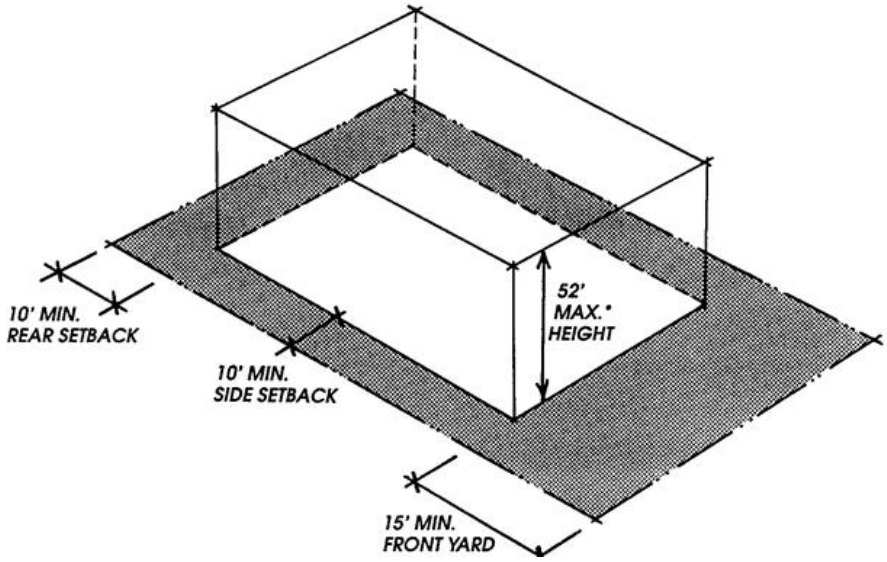

MAY EXCEED THIS HEIGHT WITH CONDITIONAL USE PERMIT PURSUANT TO SECTION 19.36

SITE DEVELOPMENT STANDARDS
CR-4 (COMMERCIAL REGIONAL-AUTO PLAZA) ZONE

MIN. LOT AREA: 1 ACRE
MAX. LOT COVERAGE: 75%

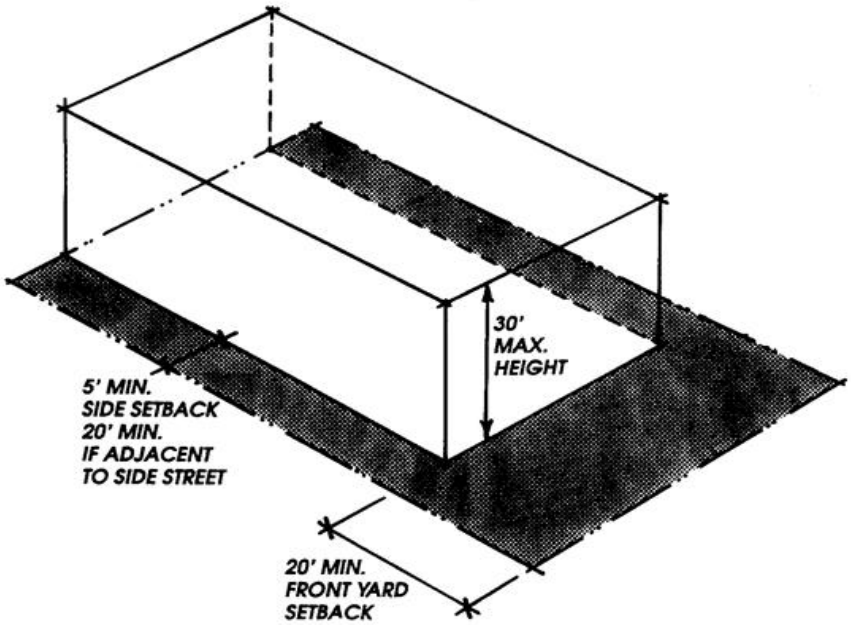

SITE DEVELOPMENT STANDARDS
CH (COMMERCIAL HEAVY) ZONE

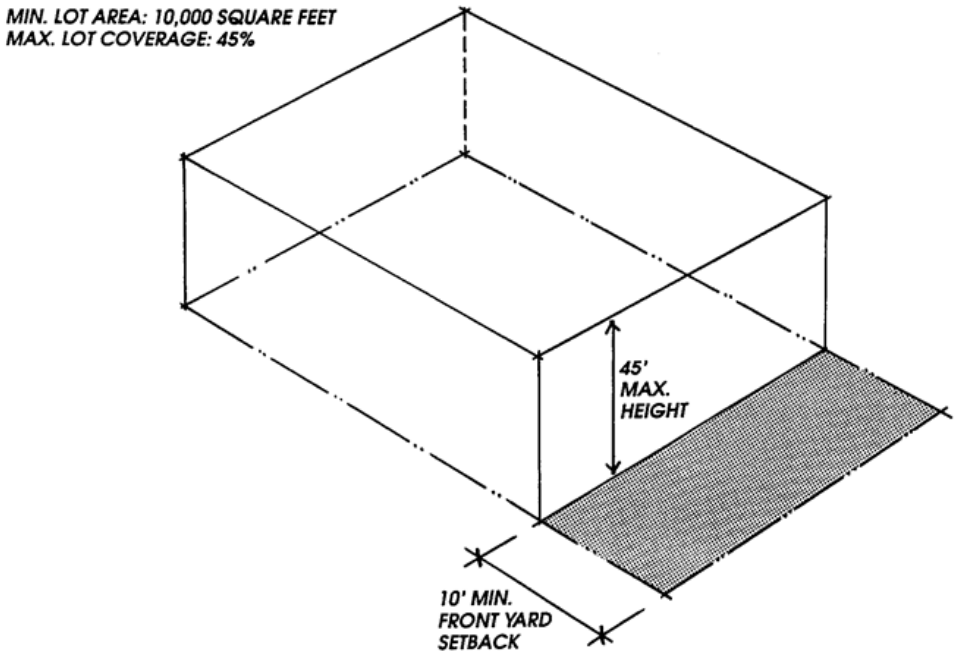

SITE DEVELOPMENT STANDARDS
CCS-1 (CENTER CITY SOUTH) ZONE

MIN. LOT AREA: 10,000 SQUARE FEET
MAX. LOT COVERAGE: 50%

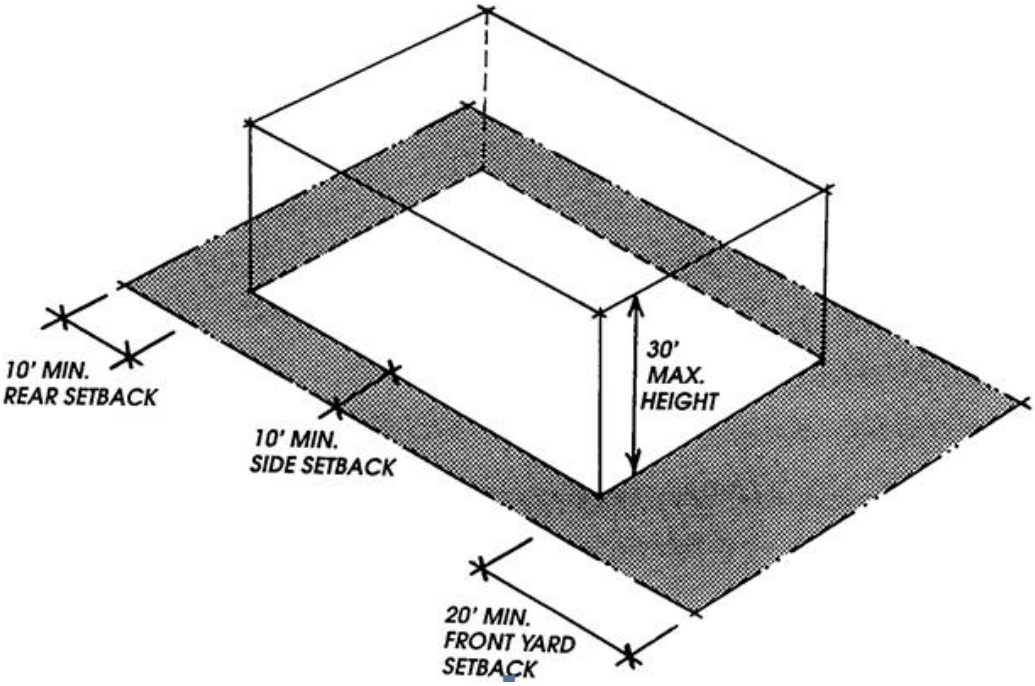

SITE DEVELOPMENT STANDARDS
CCS-2 (CENTER CITY SOUTH) ZONE

MIN. LOT AREA: 1 ACRE
MAX. LOT COVERAGE: 75%

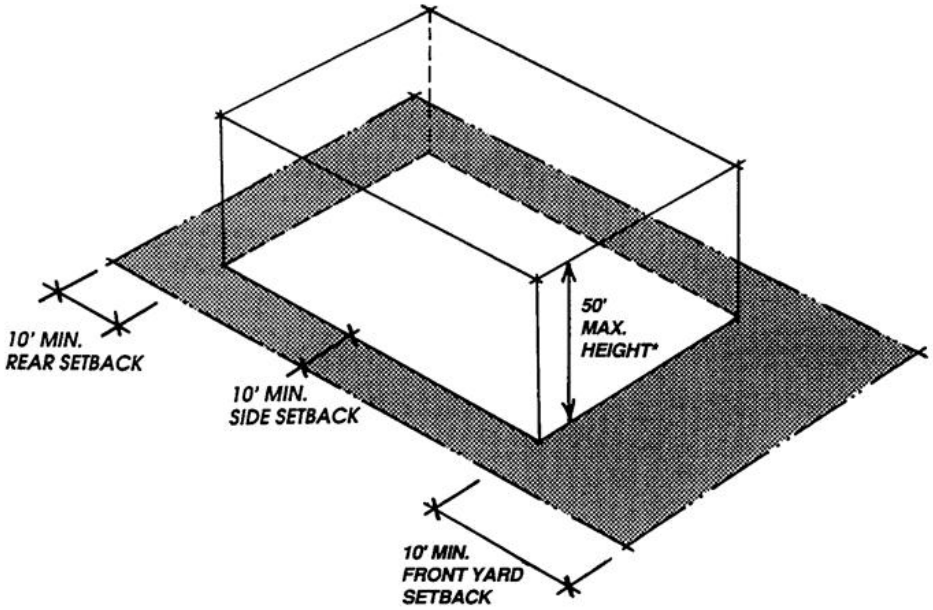

* MAY EXCEED THIS HEIGHT WITH A CONDITIONAL USE PERMIT PURSUANT TO SECTION 19.36.

TABLE 06.03
COMMERCIAL AND INDUSTRIAL ZONES SPECIFIC STANDARDS

SPECIAL STANDARDS	CO	CG -1[2]	CG -2	CG -3	CR -1	CR -2	CR -3	CR -4	CH	CCS		OIP	IL	IH	IE	UBP[3]		
										1	2					1	2	3
A. Adult Businesses									x				x[4]					
B. Alcohol Beverage Control License	x	x	x	x	x	x	x	x	x	x	x	x					x	x
C Automobile Sales		x	x		x		x[1]	x	x	x	x						x	
D. Automobile Dismantling														x	x			
E. Bonus Height						x												
F. Convenience Stores		x	x	x		x												
G. Daycare Centers	x	x	x	x	x	x	x	x	x	x	x	x	x	x	x	x	x	x
H Drive-Thru Restaurants		x	x	x		x	x[1]										x	
I. Indoor Retail Concession Malls MC 825 3/17/92		x	x						x									
J. Microbrewery		x	x	x	x	x	x		x	x	x		x					
K. Mini Malls		x	x	x			x			x							x	
L. Mini Storage		x[5]							x				x	x				
M. Mixed Use Commercial & Residential Development (Including Artist Colony & combination Residence/Office) MC 1218 3/6/06	x	x	x	x	x	x	x		x	x								
N. Mobile Vendors						x												
O. Multi-Family Housing			x			x												
P. Neighborhood Grocery Stores (with or without alcohol) MC 1093 4/5/01		x	x	x		x			x									
Q. Recycling Facilities	x	x	x	x	x	x	x	x	x	x	x	x	x	x	x	x	x	x
R. Sales and Production of Handicraft Items						x												
S. Senior Housing	x	x[6]	x			x												
T. Service Stations (Gasoline)		x	x	x	x	x	x	x	x				x	x				
U. Service Station Conversions	x	x	x	x	x	x	x	x	x			x	x	x	x			
V. Single-Family Housing, Existing MC 823 3/5/92	x	x	x	x	x	x	x	x	x			x	x	x				x
W. Single-Family/Office Conversions MC 818 1/7/92	x	x	x	x	x	x	x		x	x	x	x	x					
X. Single Room Occupancy (SRO) Facilities MC 809 10/8/91			x			x												
Y. Social Service Uses/Centers MC 1106 11/1/01	x	x	x	x		x	x						x					
Z. Extended Lodging Facilities MC 1126 7/4/02						x	x											

[1] South of I-10 and adjacent to Tippecanoe Avenue between Hospitality Lane and I-10 only. MC 989 1/16/97 and MC 1098 7/5/01
[2] MC 856 12/21/92
[3] MC 863 3/24/94
[4] MC 896 2/22/94 and MC 909 8/16/94
[5] MC 1035 12/17/98
[6] CG-1 only, MC 1304 5/4/09

2. SPECIFIC STANDARDS FOR COMMERCIAL ZONES

In addition to the general development requirements contained in Chapter 19.20 (Property Development Standards), the following standards shall apply to specific commercial zones. (See Table 06.03 on previous page.) For residential uses in commercial zones, see Table 4.03 and the standards contained in Chapter 19.04.030(2).

A. ADULT BUSINESSES MC 1060 10/18/99

1. Legislative Purpose. It is the intent of this ordinance to prevent community wide adverse economic impacts, increased crime, decreased property values, and the deterioration of neighborhoods which can be brought about by the concentration of Adult Businesses in close proximity to each other or proximity to other incompatible uses such as schools, parks, religious institutions, and residentially zoned districts or uses. The City Council finds that it has been demonstrated in various communities that the concentration of Adult Businesses causes an increase in the number of transients in the area, and an increase in crime, and in addition to the effects described above, can cause other businesses and residents to move elsewhere. It is, therefore, the purpose of this article to establish reasonable and uniform regulations to prevent the concentration of Adult Businesses or their close proximity to incompatible uses, while permitting the location of Adult Businesses in certain areas. It is also the purpose of this ordinance to regulate Adult Businesses in order to promote the health, safety, and general welfare of the citizens of the City. The provisions of this ordinance have neither the purpose nor effect of imposing a limitation or restriction on the content of any communicative materials, including adult materials. Similarly, it is not the intent nor effect of this ordinance to restrict or deny access by adults to adult materials protected by the First Amendment, or to deny access by the distributors and exhibitors of adult entertainment to their intended market. Neither is it the intent nor effect of this ordinance to condone or legitimize the distribution of obscene material.

2. Definitions. For the purpose of this section, the following definitions shall apply:

   a. Adult Arcade. An establishment where, for any form of consideration, one or more motion picture projectors, slide projectors or similar machines, for viewing by 5 or fewer persons each, are used to show films, motion pictures, video cassettes, slides or other photographic reproductions which are characterized by an emphasis upon the depiction or description of "specified sexual activities" or "specified anatomical areas."

   b. Adult Bookstore. An establishment which has a substantial portion of its stock-in-trade and offers for sale for any form of consideration any 1 or more of the following:

      1) Books, magazines, periodicals or other printed matter, or photographs, films, motion pictures, video cassettes, slides or other visual representations which are characterized by an emphasis upon the depiction or description of "specified sexual activities" or "specified anatomical areas;" or
      2) Instruments, devices or paraphernalia which are designed for use in connection with "specified sexual activities."

c. Adult Business/Adult Entertainment Business means:

1) Any business establishment which as a regular and substantial course of conduct offers, sells or distributes adult-oriented merchandise or sexually oriented merchandise, or which offers to its patrons materials, products, merchandise, services or entertainment characterized by an emphasis on matters depicting, describing, or relating to "specified sexual activities" or "specified anatomical areas," but not including those uses or activities which are preempted by State law; or

2) Any business establishment or concern which as a regular and substantial course of conduct operates as an adult arcade, adult bookstore, adult cabaret, adult motel, adult motion picture theater, adult theater, massage parlor, or sexual encounter establishment.

d. Adult Cabaret. Nightclub, bar, restaurant or similar establishment which regularly features live performances which are characterized by the exposure of "specified anatomical areas" or by "specified sexual activities", or films, motion pictures, video cassettes, slides or other photographic reproductions which are characterized by an emphasis upon the depiction or description of "specified sexual activities" or "specified anatomical areas."

e. Adult Motel. A motel or similar establishment offering public accommodations for any form of consideration which provides patrons with closed-circuit television transmissions, films, motion pictures, video cassettes, slides or other photographic reproductions which are characterized by an emphasis upon the depiction or description of "specified sexual activities" or "specified anatomical areas."

f. Adult Motion Picture Theater. An establishment where, for any form of consideration, films, motion pictures, video cassettes, slides or similar photographic reproductions are shown, and in which a substantial portion of the total presentation time is devoted to the showing of material which is characterized by an emphasis upon the depiction or description of "specified sexual activities" or "specified anatomical areas."

g. Adult Theater. A theater, concert hall, auditorium or similar establishment which, for any form of consideration, regularly features live performances which are characterized by the exposure of "specified anatomical areas" or by "specified sexual activities."

h. Establishment of an Adult Entertainment Business. Includes any of the following:

1) The opening or commencement of any such business as a new business;

2) The conversion of an existing business, whether or not an adult entertainment business, to any of the adult entertainment businesses defined herein;

3) The addition of any of the adult entertainment businesses defined herein to any other existing adult entertainment business; or

4) The relocation of any such business.

i. Massage Parlor. An establishment where, for any form of consideration, massage, alcohol rub, fomentation, electric or magnetic treatment, or similar treatment or manipulation of the human body is administered unless such treatment or manipulation is administered by a medical practitioner, chiropractor, acupuncturist, physical therapist or similar professional person licensed by the State. This definition does not include an athletic club, health club, school, gymnasium, reducing salon, spa or similar establishment where massage or similar manipulation of the human body is offered as an incidental or accessory service.

j. Sexual Encounter Establishment. An establishment, other than a hotel, motel or similar establishment offering public accommodations, which, for any form of consideration, provides a place where 2 or more persons may congregate, associate or consort in connection with "specified sexual activities" or the exposure of "specified anatomical areas." This definition does not include an establishment where a medical practitioner, psychologist, psychiatrist or similar professional person licensed by the State engages in sexual therapy.

k. Specified Anatomical Areas. Includes any of the following:

1) Less than completely and opaquely covered human genitals, pubic region, buttocks, anus or female breasts below a point immediately above the top of the areola; or

2) Human male genitals in a discernibly turgid state, even if completely and opaquely covered.

l. Specified Sexual Activities. Includes any of the following:

1) The fondling or other erotic touching of human genitals, pubic region, buttocks, anus or female breasts;

2) Sex acts, normal or perverted, actual or simulated, including intercourse, oral copulation or sodomy;

3) Masturbation, actual or simulated; or

4) Excretory functions as part of or in connection with any of the activities set forth in subdivisions (1) through (3) of this subsection.

m. Substantial Enlargement. The increase in floor area occupied by the business by more than 10%, as such floor area exists on the effective date of this Development Code.

n. Substantial Portion. For the purposes of this section "substantial portion" shall mean 20% or more of the face value of the stock in trade, or 20% of the floor area of the store, whichever is more. MC 799 7/1/91

3. Adult Business Development Permit (DP-D). Adult businesses are permitted, subject to a Development Permit (DP-D), only in the CH and IL zones. It shall be unlawful for any person to establish an Adult Business in the City of San Bernardino unless the person first obtains and continues to maintain in full force and effect a Development Permit (DP-D) from the City of San Bernardino as herein required.

   a. Notwithstanding any other provision of this Development Code, the Development/Environmental Review Committee (D/ERC) shall adopt findings and approve an application for an Adult Business Development Permit II within forty-five (45) days after receipt of a complete application if the application satisfies the requirements of this section. If the D/ERC determines that the application does not satisfy the requirements of this section, the D/ERC shall deny the application.

   b. Any party shall have the right to appeal the D/ERC's decision to the Planning Commission, and to subsequently appeal the Planning Commission's decision to the Council pursuant to Development Code Chapter 19.52. The Planning Commission and the Council shall each hold a hearing and shall render a decision within thirty (30) days after each appeal is filed unless a continuance is requested by the applicant for the Adult Business Development Permit II.

   c. Pursuant to Code of Civil Procedure Section 1094.6, any action to review the decision of the Council shall be commenced not later than the ninetieth day after the Council's decision is rendered. The Council shall take all lawful steps to insure that any party aggrieved by its decision shall be afforded prompt judicial review of said Council's decision.

   d. Standards for Approval of Adult Business Development Permit II:

      1) The operation, as proposed by the applicant, would comply with all applicable laws, including but not limited to the City's building, fire, zoning and health regulations.

      2) The applicant has not knowingly made any false, misleading or fraudulent statement of fact in the application process, or on any document required by the City in conjunction therewith.

      3) It is unlawful to cause or permit the establishment or substantial enlargement of an adult business, within 2,000 feet of another adult business or within 1,000 feet of any religious institution which received development approval prior to December 14, 1994, any school or any public park within the City or within 1,000 feet of any property designated for residential use or used for residential purposes. MC 915 12/20/94, MC 942 6/6/95

      4) Measurement of Distance. The distance between any 2 adult entertainment businesses shall be measured in a straight line, without regard to intervening structures, from the closest exterior structural wall of each business. The distance between any adult entertainment business and any religious institution, school or

public park or any property designated for residential use or used for residential purposes shall be measured in a straight line, without regard to intervening structures, from the closest exterior structural wall of the adult entertainment business to the closest property line of the religious institution, school or public park or the property designated for residential use or used for residential purposes. Should the straight line distance be intersected by a freeway, a river or a flood control channel, the distance shall instead be measured by the shortest route of travel. MC 977 7/31/96

5) Signs. All on-site signage shall conform to Chapter 19.22.

6) Viewing Area.

a. It is unlawful to maintain, operate or manage or permit to be maintained, operated or managed any adult business in which the viewing areas are not visible from a continuous main aisle or are obscured by a curtain, door, wall, or other enclosure. For purposes of this Section, viewing area means the area where a patron or customer would ordinarily be positioned while watching the performance, picture, show or film.

b. It is unlawful for more than 1 person at a time to occupy any individual partitioned viewing area or booth.

c. It is unlawful to create, maintain or permit to be maintained any holes or other openings between any 2 booths or individual viewing areas for the purpose of providing viewing or physical access between the booth or individual viewing area.

d. The opening to the viewing area shall be from the main aisle.

7) The applicant and owner, and every subsequent owner of the adult business shall obtain an adult entertainment license pursuant to SBMC Chapter 5.14. Failure to maintain said adult entertainment license in effect while the adult business is in operation shall be grounds for revocation of the Adult Business Development Permit II. The conditions of approval imposed on said adult entertainment license shall be included as conditions of approval on the Adult Business Development Permit II.

8) All construction shall comply with all applicable requirements in the San Bernardino Municipal Code and Development Code including, but not limited to the California Building Standards Code as incorporated in San Bernardino Municipal Code Chapter 15.04.

9) The D/ERC shall impose additional conditions prior to approval of an application for an Adult Business Development Permit II which are deemed necessary by the DERC to insure compliance with the Development Code and to protect the public health and safety. Such conditions shall be limited to the following: hours of

operation, maximum occupancy, fire and life safety issues, fire suppression, exterior signage, exterior and interior lighting, parking, landscaping, existence of public telephones, and security guards.

B. ALCOHOL BEVERAGE SALES

ARTICLE I – GENERAL

SECTION I – TITLE AND PURPOSE

A. Title:

(1) This ordinance shall be known as the Conditional Use Permit - Deemed Approved Alcoholic Beverage Sales Regulations Ordinance.

(2) This ordinance requires land use permits for newly established alcoholic beverage sales activities, confers deemed approved status for existing alcoholic beverage sales activities and provides standards and an administrative hearing process to review violations of those standards in order to protect the general health, safety, and welfare of the residents of the City of San Bernardino and to prevent nuisance activities where alcoholic beverage sales occur.

B. Purpose:

(1) To protect residential, commercial, industrial and civic areas and minimize the adverse impacts of nonconforming and incompatible uses; and

(2) To provide opportunities for alcoholic beverage sales establishments to operate in a mutually beneficial relationship to each other and to other commercial and civic services; and

(3) To provide mechanisms to address problems associated with the public consumption of alcoholic beverages such as litter, loitering, graffiti, unruly behavior and escalated noise levels; and

(4) To provide that alcoholic beverage sales establishments are not the source of undue public nuisances in the community; and

(5) To provide for properly maintained alcoholic beverage sales establishments so that the negative impacts generated by these activities are not harmful to the surrounding environment in any way; and

(6) To monitor Deemed Approved establishments to ensure they do not substantially change in mode or character of operation.

SECTION II – DEFINITIONS

The meaning and construction of these words and phrases, as set forth below, shall apply throughout, except where the context clearly indicates a different meaning or construction.

(A) "Administrator" means the Administrative Hearing Officer as identified in Section III.

(B) "Alcoholic Beverage" means alcohol, spirits, liquor, wine, beer, and any liquid or solid containing alcohol, spirits, wine, or beer, that contains one-half of one percent or more of alcohol by volume and that is fit for beverage purposes either alone or when diluted, mixed or combined with other substances, the sale of which requires a ABC license.

(C) "Alcoholic Beverage Sales Activity" means the retail sale of alcoholic beverages for onsite or offsite consumption.

(D) "Alcoholic Beverage Sales Establishment" means an establishment where an alcoholic beverage sales activity occurs. Alcoholic beverage sales establishments include but are not limited to the following recognized types of establishments: liquor stores; beer and wine stores; convenience markets; markets; neighborhood specialty food markets; retail sales establishments; wine shops; service stations; taverns; clubs; cocktail lounges, ballrooms, cabarets, dance bars, piano bars; billiard or game parlors, bowling alleys; nightclubs, dance halls; cafes, bars, restaurants with bars; full-service restaurants; and fast food establishments.

(E) "California Department of Alcoholic Beverage Control" or "ABC" refers to the department of the State of California empowered to act pursuant to Article 20, section 22, of the California Constitution and authorized to administer the provisions of the Alcoholic Beverage Control Act.

(F) "Conditions of Approval" means a requirement that must be carried out by the activity by: (1) a new alcoholic beverage sales activity to exercise a land use permit; or (2) a legal nonconforming alcoholic beverage sales activity to comply with deemed approved performance standards and to retain its deemed approved status.

(G) "Deemed Approved Activity" means any Legal Nonconforming alcoholic beverage sales activity, as defined in subsection (J). Such activity shall be considered a Deemed Approved activity as long as it complies with the Deemed Approved Performance Standards set forth in Article III, Section IV.

(H) "Deemed Approved Status" means the permitted use of land for a Deemed Approved Activity. Deemed Approved status replaces Legal Nonconforming status with respect to Alcoholic Beverage Sales Commercial Activity and remains in effect as long as it complies with the Deemed Approved provisions and performance standards.

(I) "Illegal Activity" means an activity, which has been finally determined to be in noncompliance with the Deemed Approved provisions and performance standards. Such an

activity shall lose its Deemed Approved status and shall no longer be considered a Deemed Approved activity.

(J) "Legal Nonconforming Alcoholic Beverage Sales Commercial Activity" or "Legal Nonconforming Activity" means an Alcoholic Beverage Sales Commercial Activity which was a nonconforming use pursuant to San Bernardino Municipal Code (Development Code) Chapter 19.62, and for which a valid state of California Alcoholic Beverage Control license had been issued and used in the exercise of the rights and privileges conferred by the license at a time immediately prior to the effective date of the Deemed Approved Alcoholic Beverage Sale Regulations Ordinance. Such an activity shall be considered a Deemed Approved Activity and shall no longer be considered a Legal Nonconforming Activity.

(K) "Off-Sale Alcohol Outlet" means an establishment that conducts retail sales of Alcoholic Beverages for consumption off the premises where sold.

(L) "On-Sale Alcohol Outlet" means an establishment that conducts retail sales of Alcoholic Beverages for consumption on the premises where sold.

(M) "Operational Standards" means regulations for the business practice activities and land use for locations with a Conditional Use Permit or those further requirements imposed to achieve these goals. Operational Standards constitute requirements which must be complied with by an establishment in order to maintain its Conditional Use Permit.

(N) "Performance Standards" means regulations for the business practice activities and land use for locations with Deemed Approved status or those further requirements imposed to achieve these goals. Performance Standards constitute requirements which must be complied with by an establishment in order to retain its Deemed Approved status.

(O) "Permit" means a Conditional Use Permit issued pursuant to this ordinance.

(P) "Permittee" means the individual or entity that owns an alcoholic beverage sale establishment and to whom a Conditional Use Permit to operate an alcoholic beverage sale establishment has been issued by the City of San Bernardino.

(Q) "Premises" means the actual space in a building devoted to alcoholic beverage sales.

(R) "Restaurant" means a bona fide eating place whose predominant function is the service of food and where on-site sale of alcoholic beverages is incidental or secondary.

SECTION III – ADMINISTRATIVE HEARING OFFICER

The "Administrative Hearing Officer" shall have the same appointment and qualifications as that designated in San Bernardino Municipal Code Chapter 9.93, Administrative Civil Penalties; and shall conduct public hearings and make recommendations intended to encourage and achieve the compliance of particular alcoholic beverage sale establishments with the provisions of this Ordinance. This section is not intended to restrict the powers and duties

otherwise pertaining to other City officers or bodies in the field of monitoring and ensuring the harmony of alcoholic beverage sale activities in the City. The Administrative Hearing Officers shall have the powers and duties assigned to them by the Development Code, and other San Bernardino Municipal Code ordinances.

SECTION IV - INSPECTION AND RIGHT OF ENTRY

The sale of alcoholic beverages is a closely regulated industry. The officials responsible for enforcement of the City Municipal Code or other provisions of the Development Code or their duly authorized representatives may enter on any site or into any structure open to the public for the purpose of investigation provided they shall do so in a reasonable manner whenever they have cause to suspect a violation of any provision of this ordinance or whenever necessary to the investigation of violations to the Conditions of Approval or Deemed Approved performance standards prescribed in these regulations. If an owner, occupant or agent refuses permission to enter, inspect or investigate, premises which are not open to the public, the officials or their representatives may seek an inspection warrant under the provisions of California Code of Civil Procedure section 1822.50 et. seq. All such inspections shall be conducted in compliance with the Fourth Amendment to the United States Constitution.

SECTION V – SEVERABILITY

If any section, subsection, sentence, clause or phrase of this ordinance is for any reason held to be invalid, such decision shall not affect the validity of the remaining portions of this ordinance. The Mayor and Common Council hereby declare that it would have adopted the ordinance and each section, subsection, sentence, clause or phrase thereof, irrespective of the fact that any one or more of the sections subsections, sentences, clauses or phrases may be declared invalid.

ARTICLE II – CONDITIONAL USE PERMITS FOR NEW ALCOHOLIC BEVERAGE SALES ACTIVITIES

SECTION I – PURPOSE

The general purposes of these regulations are to protect and promote the public health, safety, comfort, convenience, prosperity and general welfare by requiring consideration and approval of a Conditional Use Permit before a new alcoholic beverage sales activity will be permitted in any land use zoning district of the City and by requiring all new alcoholic beverage sales activities to comply with the operational standards in this ordinance and to achieve the following objectives:

(A) Protect surrounding neighborhoods from the harmful effects attributable to the sale of alcoholic beverages and to minimize the adverse impacts of nonconforming and incompatible uses.

(B) Encourage businesses selling alcoholic beverages to operate in a manner that is mutually beneficial to other such businesses and other commercial and civic activities.

(C) Provide a mechanism to address problems often associated with the public consumption of alcoholic beverages, such as litter, loitering, graffiti, unruly behavior and escalated noise levels.

(D) Ensure that businesses selling alcoholic beverages are not the source of undue public nuisances in the community.

(E) Ensure that sites where alcoholic beverages are sold are properly maintained so that negative impacts generated by these activities are not harmful to the surrounding environment in any way.

This Article alone does not allow or permit alcoholic beverage sales activities, but only applies to these activities where otherwise allowed or permitted within an applicable land use zoning district. This Article does not authorize alcoholic beverage sales activities in any land use district where they are not otherwise allowed or permitted by the applicable involved zoning district's regulations. The provisions of this ordinance are intended to compliment the State of California alcohol-related laws. The city does not intend to replace or usurp any powers vested in the California Department of Alcoholic Beverage Control.

SECTION II – REQUIREMENT

Notwithstanding any other provisions of this Code, no new on-site or off-site alcoholic beverage sales activity may be established unless a Conditional Use Permit is first obtained in accordance with the requirements of this Article. The following uses are exempt from this requirement to obtain a Conditional Use Permit, and shall be subject to Director approval of a Development Permit and a finding of public convenience or necessity, if required:

(A) Sit-down restaurants whose predominant function is the service of food and where the on-site sale of alcoholic beverages is incidental or secondary.

(B) Establishments containing 10,000 square feet or more, including but not limited to supermarkets and drug stores, which do not sell alcoholic beverages as the principal business

(C) Establishments, whose applications have been deemed complete prior to the effective date of this Ordinance by the Community Development ~~s~~ Department.

(D) Temporary uses issued a Temporary License by the California Department of Alcoholic Beverage Control and established in compliance with all City laws and regulations.

SECTION III – LOCATIONAL RESTRICTIONS

(A) Unless otherwise exempted under subsections B – H, a new alcoholic beverage sales activity is not permitted within 500 feet of any of the following locations:

1. A public or private state licensed or accredited school.

2. A public park, playground, recreational area, or youth facility, including a nursery school, preschool, or day-care facility.

3. A place of worship or religious institution.

4. A hospital.

5. An alcohol or other drug abuse recovery or treatment facility.

6. A county social service office.

(B) Establishments containing 10,000 square feet or more, including but not limited to supermarkets and drugstores, which do not sell alcoholic beverages as the principal business are exempt from the locational restrictions.

(C) Sit down restaurants whose predominant function is the service of food and where the on-site sale of alcoholic beverages is incidental or secondary are exempt from these locational restrictions. An incidental bar or lounge shall be allowed for the convenience of dining patrons. (Establishments which are primarily a bar or lounge or have a bar or lounge area as a principal or independent activity are not included in this exemption.)

(D) All other establishments for on-site consumption of alcohol may be exempted from the locational restrictions, subject to evaluation of site-specific conditions through the Conditional Use Permit review process and considering recommendations from the Police Department.

(E) Specialty retail establishments that offer unique product lines or variety of selection warranting a finding of public convenience or necessity are exempt from the locational restrictions.

(F) An automobile service station convenience store that meets the location criteria of Section 19.06.030(2)(T) may be exempted from these locational restrictions, subject to evaluation of site-specific conditions through the Conditional Use Permit review process and considering recommendations from the Police Department.

(G) A fraternal organization or veterans club may be exempted from the locational restrictions, subject to evaluation of site-specific conditions through the Conditional Use Permit review process and considering recommendations from the Police Department.

(H) Temporary uses issued a Temporary License by the California Department of Alcoholic Beverage Control and established in compliance with all City laws and regulations are exempt from the locational restrictions.

(I) The following location conditions will be considered in the review of Conditional Use Permit applications, and may be grounds for denial based on potential adverse effects to the public interest, health, safety or convenience:

1. A location within a crime reporting district, or within 500 feet of a crime reporting district, where the general crime rate exceeds the city-wide general crime rate by more than 20 percent.

2. A location where the new alcoholic beverage sales activity would be within 500 feet from an existing alcoholic beverage sales activity, or would lead to the grouping of more than four alcoholic beverage sales activities within a 1,000 foot radius from the new alcoholic beverage sales activity.

SECTION IV – OPERATIONAL STANDARDS

All new alcoholic beverage sales activities shall be designed, constructed, and operated to conform to all of the following operational standards:

(A) That it does not result in adverse effects to the health, peace or safety of persons residing or working in the surrounding area.

(B) That it does not jeopardize or endanger the public health or safety of persons residing or working in the surrounding area.

(C) That it does not result in repeated nuisance activities within the premises or in close proximity of the premises, including but not limited to disturbance of the peace, illegal drug activity, public drunkenness, drinking in public, harassment of passersby, gambling, prostitution, sale of stolen goods, public urination, theft, assaults, batteries, acts of vandalism, excessive littering, loitering, graffiti, illegal parking, excessive loud noises, especially in the late night or early morning hours, traffic violations, curfew violations, lewd conduct, or police detentions and arrests.

(D) That it complies with all provisions of local, state or federal laws, regulations or orders, including but not limited to those of the California Department of Alcoholic Beverage Control ("ABC"), California Business and Professions Code §§ 24200, 24200.6, and 25612.5, as well as any condition imposed on any permits issued pursuant to applicable laws, regulations or orders. This includes compliance with annual City business registration fees.

(E) That its upkeep and operating characteristics are compatible with, and will not adversely affect the livability or appropriate development of abutting properties and the surrounding neighborhood.

(F) That the owners and all employees of establishments involved in the sale of alcoholic beverages complete an approved course in Licensee Education on Alcohol and Drugs (LEAD), or other "Responsible Beverage Service" (RBS) training by October 21, 2011, or within sixty (60) days of hire for employees hired after that date. To satisfy this requirement, the RBS course must be recognized by the California Department of Alcoholic Beverage Control. The RBS course shall include at a minimum the following: a review of ABC laws and regulations; administrative, criminal and civil liabilities;

acceptable forms of identification; and how to identify minors and persons already intoxicated. MC 1358 7/5/11

1. Sit down restaurants that continue to serve menu items until closing and whose predominant function is the service of food and where the on-site sale of alcoholic beverages is incidental or secondary are exempt from this training requirement. An incidental bar or lounge shall be allowed for the convenience of dining patrons. (Establishments which are primarily a bar or lounge or have a bar or lounge area as a principal or independent activity are not included in this exemption.) Fraternal organizations and veterans clubs are exempt from this training requirement.

2. Retail outlets with 25 or more employees or containing 10,000 square feet or more, and subject to this training requirement may elect to send only supervisory employees to the RBS training, who would then be responsible for training all employees who are involved in the sale of alcoholic beverages.

(G) A copy of these operational standards, any applicable ABC or City operating conditions, and any training requirements shall be posted in at least one prominent place within the interior of the establishment where it will be readily visible and legible to the employees and patrons of the establishment.

SECTION V – ADMINISTRATION

The San Bernardino City Planning Commission shall administer Conditional Use Permits.

SECTION VI – PERMIT APPLICATION

Any person, association, partnership, corporation or other entity desiring to obtain an alcoholic beverage sales activity Conditional Use Permit shall file an application with the City of San Bernardino Community Development Department to forward to the San Bernardino City Planning Commission on a form provided by the City. The application shall be accompanied by a nonrefundable application processing fee in an amount established by a resolution of the Mayor and Common Council.

The application for a Conditional Use Permit shall include, but not be limited to the following information:

(A) The name, address and telephone number of the applicant. If the applicant is a corporation, the applicant shall set forth the name of the corporation exactly as shown in its articles of incorporation. The applicant corporation or partnership shall designate one of its officers or general partners to act as its responsible management officer.

(B) The name, address, and telephone number of each lender or share holder with a five percent or more financial interest in the proposed business or any other person to whom a share or percentage of the income of the establishment is to be paid.

(C) The name, address, and telephone number of the person who shall manage and operate the establishment for which the permit is requested.

(D) The name, address, and telephone number, if available, of all existing schools, parks, playgrounds or recreational areas, nonprofit youth facilities, places of worship, hospitals, alcohol or other drug abuse recovery or treatment facilities or county social service offices within 500 feet of the proposed alcoholic beverage sales activity establishment.

(E) The name, address, and telephone number, if available, of all alcoholic beverage sale activities within 500 feet of the proposed alcoholic beverage sales activity establishment and within a 1000 foot radius from the proposed alcoholic beverage sales activity establishment.

(F) The name, address, and telephone number of a person authorized to accept service of legal notices.

(G) The proposed business name of the alcoholic beverage sales activity establishment and description of all operating aspects of the proposed business.

(H) The type of ABC license the applicant is seeking for the alcoholic beverage sales activity establishment.

(I) Any other information reasonably necessary to accomplish the purposes of this ordinance.

(J) The Planning Commission may refer the application to other City departments to determine whether the premises where the alcoholic beverage sales activity establishment will be located, complies with the City's building, health, zoning and fire ordinances or other applicable ordinances or laws. City departments may conduct an inspection of the premises to determine compliance with the ordinances and other laws they administer. City departments may prepare reports summarizing their inspections and recommending whether to approve or deny the application based on their inspections.

SECTION VII – ACTION ON PERMIT APPLICATION

The Planning Commission shall approve issuance of the Conditional Use Permit to allow a new alcoholic beverage sales activity upon making the following findings:

(A) The proposed alcoholic beverage sales activity establishment is located in a zoning district in which the establishment is a permitted use.

(B) A finding of "public convenience and necessity" (Business and Professions Code Section 23958.4(b) (2)), if the activity will be located in an area that has been determined by the state of California Department of Alcoholic Beverage Control to have an undue concentration of licenses as defined in Business and Professions Code Section 23958.4(a).

(C) A finding that the alcoholic beverage sales activity will not aggravate existing problems in the neighborhood created by the sale of alcohol such as loitering, public drunkenness, alcoholic beverage sales to minors, noise and littering.

(D) The proposed establishment will not detrimentally affect nearby neighborhoods considering the distance of the alcohol establishment to residential buildings, schools, parks, playgrounds or recreational areas, nonprofit youth facilities, places of worship, hospitals, alcohol or other drug abuse recovery or treatment facilities, county social service offices, or other alcoholic beverages sales activity establishments.

(E) The proposed establishment will otherwise be compatible with existing and potential uses within the general area.

(F) The proposed establishment is not located in what has been determined to be a high-crime area or where a disproportionate number of police service calls occur.

(G) The use of the proposed establishment is consistent with the General Plan.

SECTION VIII – CONDITIONS OF APPROVAL

Conditions of Approval that may be imposed include but are not limited to the following:

(A) Prohibited Products: To discourage nuisance activities, an Off-Sale Alcohol Outlet may be prohibited from selling one or more of the following products:

(1) Wine or distilled spirits in containers of less than 750 milliliters.

(2) Malt beverage products with alcohol content greater than five and one-half percent by volume.

(3) Wine with an alcoholic content greater than 14 percent by volume unless in corked bottles and aged at least two years.

(4) Beer or malt liquor sold individually in containers of 40 ounces or less.

(5) Containers of beer or malt liquor not in their original factory packages of six-packs or greater.

(6) Distilled spirits in bottles or containers smaller than 375 milliliters.

(7) Cooler products, either wine- or malt beverage- based, in less than four-pack quantities.

(B) Pay Telephones: Pay telephones on the site of the establishment shall be required to be of the type that only allow outgoing calls and shall be located in a visible and well-lighted location.

(C) Program: A "complaint response community relations" program established and maintained by the establishment conducting the Deemed Approved Activity may be required. The program may include the following:

(1) Posting at the entry of the establishment providing the telephone number for the area commander of the local law enforcement substation to any requesting individual.

(2) Coordinating efforts with the police department to monitor community complaints about the establishment activities.

(3) Having a representative of the establishment meet with neighbors or the applicable neighborhood association on a regular basis and at their request attempt to resolve any neighborhood complaints regarding the establishment.

(D) Activities: If appropriate the following activities may be prohibited on the premises: pool or billiard tables football or pinball games, arcade style video or electronic games coin-operated amusement devices.

(E) Chilled Alcoholic Beverages: An Off-Sale Alcohol Outlet may be prohibited from maintaining refrigerated or otherwise chilled alcoholic beverages on the premises.

(F) Hours of Operation: In an Off-Sale Alcohol Outlet, the sale of alcoholic beverages may be restricted to certain hours of each day of the week unless limited further by the State of California Department of Alcoholic Beverage Control.

(G) Cups: In Off-Sale Outlets, the sale or distribution to the customer of paper or plastic cups in quantities less than their usual and customary packaging may be prohibited.

(H) Signs: The following signs shall be required to be prominently posted in a readily visible manner on an interior wall or fixture, and not on windows, in English, Spanish and the predominant language of the patrons:

(1) "California State Law prohibits the sale of alcoholic beverages to persons under 21 years of age."

(2) "No Loitering or Public Drinking."

(3) "It is illegal to possess an open container of alcohol in the vicinity of this establishment."

(I) Presentation of Documents: A copy of the Conditions of Approval and the California Department of Alcoholic Beverage Control license shall be required to be kept on the premises and presented to any City Enforcement Officer or authorized state or county official upon request.

(J) Mitigating Alcohol Related Problems: The establishment shall be required to operate in a manner appropriate with mitigating alcohol related problems that negatively impact those individuals living or working in the neighborhood including but not limited to sales to minors, the congregation of individuals, violence on or near the premises, drunkenness, public urination, solicitation, drug-dealing, drug use, loud noise and litter.

(K) Drug Paraphernalia: An Off-Sale Alcohol Outlet shall be prohibited from selling drug/tobacco paraphernalia products as defined in Health and Safety Code sections 11014.5 and 11364.5. "Drug Paraphernalia" means all equipment products and materials of any kind that are used intended for use or designed for use in planting, propagating, cultivating, growing, harvesting, manufacturing, compounding, converting, producing, processing, preparing, testing, analyzing, packaging, repackaging, storing, containing, concealing, injecting, ingesting, inhaling, or otherwise introducing into the human body a controlled substance in violation of the California Uniform Controlled Substances Act commencing with California Health and Safety Code section 11000.

(L) Loitering: The establishment's operators or employees shall be required to discourage loiterers and to ask persons loitering longer than fifteen minutes to leave the area and contact local law enforcement officials for enforcement of applicable trespassing and loitering laws if persons requested to leave fail to do so.

(M) Security Cameras: At least two 24-hour time lapse security cameras may be required to be installed and properly maintained on the exterior of the building at locations recommended by the Police Department. All criminal and suspicious activities recorded on this surveillance equipment must be reported to local law enforcement. To the extent allowed by law, the establishment operators may be required to provide any tapes or other recording media from the security cameras to the Police Department.

(N) Security Guards: An establishment may be required to retain a specified number of security guards. The number of security guards shall vary based upon the specific facts and circumstances of each establishment site and operation. All security guards shall have all required state and City permits and licenses.

(O) Prohibited Vegetation: Exterior vegetation shall not be planted or maintained that could be used as a hiding place for persons on the premises. Exterior vegetation may be planted and maintained in a manner that minimizes its use as a hiding place.

(P) Window Obstructions: No more than 25% of windows or clear doors shall bear advertising of any sort, and all advertising signage shall be placed and maintained in a manner that ensures that law enforcement personnel have a clear and unobstructed view of the interior of the premises, including the area in which the cash registers are maintained, from the exterior public sidewalk or entrance.

SECTION IX – APPEALS FROM A DETERMINATION ON AN APPLICATION FOR PERMIT

Any applicant or other person aggrieved by a decision of the Planning Commission on an application for a Conditional Use Permit required by this Article may appeal the decision to the Mayor and Common Council pursuant to Development Code Chapter 19.52.

SECTION X – GROUNDS FOR CONDITIONAL USE PERMIT SUSPENSION OR REVOCATION

An alcoholic beverage sales activity establishment Conditional Use Permit may be suspended by the Planning Commission for up to one year or revoked after a noticed public hearing held pursuant to Development Code Chapter 19.52, for failure to comply with Operational Standards, training requirements or conditions imposed through the Conditional Use Permit.

Notice of intention to suspend or revoke shall be in writing and shall state the grounds therefore. Notice shall be mailed by U.S. First-Class Mail and Certified Mail Return Receipt Requested at least 10 days before the date of the hearing.

SECTION XI – INVESTIGATIVE PROCEDURES OF POTENTIAL VIOLATION OF CONDITIONS OF APPROVAL

The City shall appoint an Administrative Hearing Officer pursuant to San Bernardino Municipal Code Chapter 9.93, to conduct hearings, make findings and determine whether violations of this Article, including the Operational Standards and Conditions of Approval, as well as whether undue negative impacts or public nuisance activities have occurred, are occurring or are likely to occur in the future. The assigned Administrative Hearing Officer shall exercise all powers relating to the conduct of the administrative hearing pursuant to San Bernardino Municipal Code Chapter 9.93.

Upon the City's receipt of a complaint from the public, Police Department, City official or any other interested person that a Conditional Use Permit activity is in violation of the Operational Standards and/or Conditions of Approval set forth in this Article, the following procedure shall be followed:

(A) A City Enforcement Officer (any Police Officer or other City Enforcement Officer as listed in San Bernardino Municipal Code Chapter 9.93) shall assess the nature of the complaint and its validity by conducting an on-site observation and inspection of the premises to assess the activity's compliance with Operational Standards and/or Conditions of Approval.

(B) If the Enforcement Officer determines that the activity is in violation of the Operational Standards and/or Conditions of Approval, the Enforcement Officer may issue an Administrative Citation or an Administrative Civil Penalties Notice, which then may be subject to a hearing by the Administrative Hearing Officer pursuant to San Bernardino Municipal Code Chapter 9.92 or 9.93.

(C) Any Administrative Citation or Administrative Civil Penalties Notice issued under this section shall be issued, processed, and enforced in compliance with all of the provisions of San Bernardino Municipal Code Chapter 9.92 and 9.93, unless otherwise expressly provided by this Ordinance.

(D) The Administrative Hearing Officer shall determine whether the activity is in compliance with the operational standards and/or Conditions of Approval. Based on this determination, the Hearing Officer may continue the Conditional Use permit status for the use in question, may impose Administrative Civil Penalties pursuant to San Bernardino Municipal Code Chapter 9.93 for violations of the Operational Standards and/or Conditions of Approval or may recommend that the Planning Commission revoke the activity's Conditional Use Permit. If the Hearing Officer determines instead to impose further, new conditions on the activity, such conditions shall be based upon the information then before the Hearing Officer. In reaching a determination as to whether a use has violated the Operational Standards or Conditions of Approval, or as to the appropriateness of imposing additional or amended conditions on a use, recommending suspension or revocation of a use, assessing administrative penalties, or the amount of Administrative Civil Penalties to assess, the Hearing Officer may consider:

1. The length of time the activity has been out of compliance with the Operational Standards and/or Conditions of Approval.

2. The impact of the violation of the Operational Standards and/or Conditions of Approval on the community.

3. Any information regarding the owner of the activity's efforts to remedy the violation of the operational standards and/or Conditions of Approval.

(E) "Efforts to Remedy" shall include, but are not limited to:

1. Timely calls to the Police Department that are placed by the owner of the Deemed Approved activity, his or her employees, or agents.

2. Requesting that those persons engaging in activities causing violations of the Operational Standards and or Conditions of Approval cease those activities, unless the owner of the activity, or his or her employees or agents feels that their personal safety would be threatened in making that request.

3. Making improvements to the activity's property or operations, including but not limited to the installation of lighting sufficient to illuminate the area within the use's property line, the installation of security cameras, the clearing of window obstructions, the cleaning of sidewalks and the abatement of graffiti within three days.

(F) If in the judgment of the Administrative Hearing Officer, the operations of the owner of the activity constitute a nuisance, the owner is unable or unwilling to abate the nuisance and the nuisance is shown to be a threat to the public health and safety of the surrounding

neighborhood, the Hearing Officer may recommend that the Planning Commission suspend or revoke the activity's Conditional Use permit. All determinations, decisions, and conditions made or imposed regarding the use of a activity shall run with the land.

(G) The decision of the Administrative Hearing Officer shall become final and conclusive and shall not be subject to appeal to the Mayor and Common Council. Once the decision of the Administrative Hearing Officer becomes final, the time in which judicial review of the decision must be sought shall be governed by California Code of Civil Procedure Section 1094.6, or other applicable State Law.

SECTION XII – APPEAL FROM SUSPENSION OR REVOCATION OF CONDITIONAL USE PERMIT

Any applicant or other person aggrieved by a decision of the Planning Commission from a suspension or revocation of a Conditional Use Permit may appeal the decision to the Mayor and Common Council pursuant to Development Code Chapter 19.52.

ARTICLE III – STANDARDS AND PROCEDURES FOR EXISTING DEEMED APPROVED ALCOHOLIC BEVERAGE SALES ACTIVITIES

SECTION I – PURPOSE

The purposes of these regulations are to protect and promote the public health, safety, comfort, convenience, prosperity and general welfare by requiring that alcoholic beverage sales activities that are legal nonconforming activities to comply with the Deemed Approved performance standards in this Chapter and to achieve the following objectives:

(A) Protect surrounding neighborhoods from the harmful effects attributable to the sale of alcoholic beverages and to minimize the adverse impacts of nonconforming and incompatible uses.

(B) Encourage businesses selling alcoholic beverages to operate in a manner that is mutually beneficial to other such businesses and other commercial and civic activities.

(C) Provide a mechanism to address problems often associated with the public consumption of alcoholic beverages, such as litter, loitering, graffiti, unruly behavior and escalated noise levels.

(D) Ensure that businesses selling alcoholic beverages are not the source of undue public nuisances in the community.

(E) Ensure that sites where alcoholic beverages are sold are properly maintained so that negative impacts generated by these activities are not harmful to the surrounding environment in any way.

SECTION II – APPLICABILITY

The Deemed Approved alcoholic beverage sales regulations shall apply to all alcoholic beverage sales activities for on-site or off-site consumption existing and operating within the City on the effective date of this ordinance.

SECTION III – AUTOMATIC DEEMED APPROVED STATUS

All Alcoholic Beverage Sales Commercial Activities that were Legal Nonconforming Activities, on the effective date of this ordinance, whether or not previously granted a Conditional Use Permit by the City, shall automatically become Deemed Approved Activities as of the effective date of this ordinance and shall no longer be considered Legal Nonconforming Activities.

Each deemed approved activity shall retain its Deemed Approved status as long as it complies with the performance standards of this ordinance.

The occurrence of any of the following shall terminate the Deemed Approved status of the alcoholic beverage sales activity after notice and a hearing in accordance with Section VI below, and require the issuance of a Conditional Use Permit in order to continue the alcoholic beverage sales activity:

(A) An existing alcoholic beverage sales activity changes its activity so that ABC requires a different type of license.

(B) There is a substantial modification to the mode or character of operation.

(C) As used herein, the phrase “substantial change of mode or character of operation” includes but is not be limited to the following:

1. The off-site alcoholic beverage sales activity establishment increases the floor or land area or shelf space devoted to the display or sales of any alcoholic beverage.

2. The on-site alcoholic beverage sales activity establishment increases the floor or land area or shelf space devoted to the display, sales or service of any alcoholic beverage.

3. The off-site or on-site alcoholic beverage sales activity establishment expands the sale or service of any alcoholic beverages and/or increases the number of customer seats primarily devoted to the sale or service of any alcoholic beverages.

4. The off-site or on-site alcoholic beverage sales activity establishment extends the hours of operation.

5. The alcoholic beverage sales activity establishment proposes to reinstate alcohol sales after the ABC license has been either revoked or suspended for a period 90 days or greater by ABC.

6. The alcoholic beverage sales activity voluntarily discontinues active operation for more than 90 consecutive days or ceases to be licensed by the ABC.

(D) A substantial change in the mode of character of operation shall not include:

1. Re-establishment, restoration or repair of an existing alcoholic beverage sales activity on the same premises after the premises have been rendered totally or partially inaccessible by a riot, insurrection, toxic accident or act of God, provided that the re-establishment, restoration or repair does not increase the sales or service of any alcoholic beverage, extend the hours of operation of any establishment or add to the capacity, floor or land area or shelf space devoted to alcoholic beverages of any establishment that sells or serves any alcoholic beverages.

2. Temporary closure for not more than ninety days in cases of vacation or illness or for purposes of repair, renovation, or remodeling if that repair, renovation, or remodeling does not change the nature of the premises and does not increase the sales or service of any alcoholic beverage, extend the hours of operation of any establishment, or add to the capacity, floor or land area, or shelf space devoted to alcoholic beverages of any establishment that sells or serves any alcoholic beverages.

(E) Discontinuance. Once it is determined by the City that there has been a discontinuance of active operation for 90 consecutive days or a cessation of ABC licensing, it may be resumed only upon the granting of a Conditional Use Permit as provided in Article II. The property owner shall be notified by the City of the termination of the Deemed Approved status and shall be informed of the property owner's right to appeal the City's decision to the Administrative Hearing Officer.

SECTION IV – DEEMED APPROVED PERFORMANCE STANDARDS

The provisions of this section shall be known as the Deemed Approved performance standards. The purpose of these standards is to control dangerous or objectionable environmental effects of alcoholic beverage sales activities. These standards shall apply to all Deemed Approved alcoholic beverage sales activities that hold Deemed Approved status pursuant to this Article.

An alcoholic beverage sales activity ("Alcohol Outlet") shall retain its Deemed Approved status only if it conforms to all of the following Deemed Approved performance standards:

(A) The Alcohol Outlet shall not cause adverse effects to the health, peace or safety of persons residing or working in the surrounding area.

(B) The Alcohol Outlet shall not jeopardize or endanger the public health or safety of persons residing or working in the surrounding area.

(C) The Alcohol Outlet shall not allow repeated nuisance activities within the premises or in close proximity of the premises, including but not limited to disturbance of the peace, illegal drug activity, public drunkenness, drinking in public, harassment of passersby,

gambling, prostitution, sale of stolen goods, public urination, theft, assaults, batteries, acts of vandalism, excessive littering, loitering, graffiti, illegal parking, excessive loud noises, especially in the late night or early morning hours, traffic violations, curfew violations, or lewd conduct.

(D) The Alcohol Outlet shall comply with all provisions of local, state or federal laws, regulations or orders, including but not limited to those of the ABC, California Business and Professions Code §§ 24200, 24200.6, and 25612.5, as well as any condition imposed on any permits issued pursuant to applicable laws, regulations or orders. This includes compliance with annual City business registration fees.

(E) The Alcohol Outlet's upkeep and operating characteristics shall be compatible with and not adversely affect the livability or appropriate development of abutting properties and the surrounding neighborhood.

(F) A copy of these performance standards, any applicable ABC or City operating conditions, and any training requirements shall be posted in at least one prominent place within the interior of the establishment where it will be readily visible and legible to the employees and patrons of the establishment.

(G) The owners and all employees of establishments involved in the sale of alcoholic beverages shall complete an approved course in Licensee Education on Alcohol and Drugs (LEAD), or other "Responsible Beverage Service" (RBS) training by October 21, 2011, or within 60 days of hire for employees hired after that date. To satisfy this requirement, the RBS course must be recognized by the California Department of Alcoholic Beverage Control. The RBS course shall include at a minimum the following: a review of ABC laws and regulations; administrative, criminal and civil liabilities; acceptable forms of identification; and how to identify minors and persons already intoxicated. MC 1358 7/5/11

1. Sit down restaurants that continue to serve menu items until closing and whose predominant function is the service of food and where the on-site sale of alcoholic beverages is incidental or secondary are exempt from this training requirement. An incidental bar or lounge shall be allowed for the convenience of dining patrons. (Establishments which are primarily a bar or lounge or have a bar or lounge area as a principal or independent activity are not included in this exemption.) Fraternal organizations and veterans clubs are exempt from this training requirement.

2. Retail outlets with 25 or more employees or containing 10,000 square feet or more, and subject to this training requirement may elect to send only supervisory employees to the RBS training, who would then be responsible for training all employees who are involved in the sale of alcoholic beverages.

SECTION V – NOTIFICATION TO OWNERS OF ESTABLISHMENTS CONDUCTING DEEMED APPROVED ACTIVITIES

The City's Community Development Department shall notify the owner of each Deemed Approved activity, and also, if not the same, any property owner at the address shown on the City's

property tax assessment records, of the activity's Deemed Approved status. The notice shall be sent by U.S. First Class Mail and Certified Mail Return Receipt Requested and shall include a copy of the performance standards in this Article with the requirement that they be posted in a conspicuous and unobstructed place visible from the entrance of the establishment for public review. This notice shall also provide that the activity is required to comply with all performance standards, and that the activity is required to comply with all other aspects of the Deemed Approved regulations. Should the notice be returned, then the notice shall be sent via regular U.S. Mail. Failure of any person to receive notice given pursuant to this Article shall not affect the Deemed Approved status of the activity.

SECTION VI - DEEMED APPROVED STATUS PROCEDURES

The City shall appoint an Administrative Hearing Officer pursuant to San Bernardino Municipal Code Chapter 9.93 to conduct hearings, make findings and determine whether violations of this Article, including the Deemed Approved performance standards, Conditions of Approval, undue negative impacts or public nuisance activity, have occurred, are occurring, or are likely to occur in the future. The assigned Administrative Hearing Officer shall exercise all powers relating to the conduct of the administrative hearing pursuant to San Bernardino Municipal Code Chapter 9.93.

Upon the City's receipt of a complaint from the public, Police Department, City official or any other interested person that a Deemed Approved use is in violation of the performance standards set forth in this Article, the following procedure shall be followed:

(A) A City Enforcement Officer shall assess the nature of the complaint and its validity by conducting an on-site observation and inspection of the premises to assess the activity's compliance with performance standards.

(B) If the Enforcement Officer determines that the Deemed Approved activity is in violation of the performance standards, the Enforcement Officer may issue an Administrative Citation or an Administrative Civil Penalties Notice, which then may be subject to a hearing by the Administrative Hearing Officer pursuant to San Bernardino Municipal Code Chapters 9.92 or 9.93.

(C) Any Administrative Citation or Administrative Civil Penalties Notice issued under this section shall be issued, processed, and enforced in compliance with all of the provisions of San Bernardino Municipal Code Chapters 9.92 and 9.93, unless otherwise expressly provided by this Ordinance.

(D) The Administrative Hearing Officer shall determine whether the Deemed Approved activity is in compliance with the performance standards. Based on this determination, the Hearing Officer may continue the Deemed Approved status for the use in question, may impose Administrative Civil Penalties for violations of the performance standards pursuant to San Bernardino Municipal Code Chapter 9.93, may impose such reasonable conditions, including but not limited to the conditions listed in Article II, Section VIII above, as are in the judgment of the Hearing Officer necessary to ensure compliance with the performance standards and may suspend or revoke the Deemed Approved activity's Deemed Approved

status. If the Hearing Officer determines instead to impose further, new conditions on the Deemed Approved activity, such conditions shall be based upon the information then before the Hearing Officer. In reaching a determination as to whether a use has violated the performance standards, or as to the appropriateness of imposing additional or amended conditions on a use, suspending or revoking a use, assessing Administrative Civil Penalties, or the amount of Administrative Civil Penalties to assess, the Hearing Officer may consider:

1. The length of time the Deemed Approved activity has been out of compliance with the performance standards.

2. The impact of the violation of the performance standard(s) on the community.

3. Any information regarding the owner of the Deemed Approved activity's efforts to remedy the violation of the performance standard(s).

(E) "Efforts to Remedy" shall include, but are not limited to:

1. Timely calls to the Police Department that are placed by the owner of the Deemed Approved activity, his or her employees, or agents.

2. Requesting that those persons engaging in activities causing violations of the performance standard(s) cease those activities, unless the owner of the Deemed Approved activity, or his or her employees or agents feels that their personal safety would be threatened in making that request.

3. Making improvements to the Deemed Approved activity's property or operations, including but not limited to the installation of lighting sufficient to illuminate the area within the use's property line, the installation of security cameras, clear unobstructed windows, clean sidewalks and graffiti abated within three days.

(F) If in the judgment of the Administrative Hearing Officer, the operations of the owner of the deemed Approved activity constitute a nuisance, the owner is unable to abate the nuisance and the nuisance is shown to be a threat to the public health and safety of the surrounding neighborhood, the Hearing Officer may suspend or revoke the activity's Deemed Approved status. Any continued operation of the business shall require a Conditional Use Permit approved by the Planning Commission. All determinations, decisions, and conditions made or imposed regarding the use of a Deemed Approved activity shall run with the land.

(G) The decision of the Administrative Hearing Officer shall become final and conclusive and shall not be subject to appeal to the Mayor and Common Council. Once the decision of the Administrative Hearing Officer becomes final as provided in this Chapter, the time in which judicial review of the decision must be sought shall be governed by California Code of Civil Procedure Section 1094.6, or other applicable State Law.

ARTICLE IV - ALCOHOLIC BEVERAGE SALES ACTIVITY PENALTIES

(A) Any person who violates, causes or permits another person to violate any provision of this ordinance is guilty of either an infraction or misdemeanor. Any person convicted of either an infraction or misdemeanor under the provision of this ordinance shall be punished by a fine, imprisonment or both according to Chapter 1.12 of the San Bernardino Municipal Code.

(B) Separate Offenses for Each Day: Any violator shall be guilty of a separate offense for each and every day during any portion of which any violation of any provision of these regulations is committed, continued, permitted, or caused by such violator and shall be punishable accordingly.

(C) Any Violation a Public Nuisance: In addition to the penalties provided in this section, any use or condition caused or permitted to exist in violation of any of the provisions of these regulations shall be and is declared to be a public nuisance and may be abated as such by the City.

(D) Injunction as Additional Remedy: Any violation of any provision of these regulations shall be and is declared to be contrary to the public interest and shall at the discretion of the City, create a cause of action for injunctive relief.

(E) Administrative Civil Penalties: In addition to any other penalties provided in this section, $1,000.00 in Administrative Civil Penalties shall be imposed for each and every offense and for each and every day during any portion of which any violation of any provision of these regulations is committed, continued, permitted, or caused by such violator.

(F) The City shall bill all persons liable for these Administrative Civil Penalties by mail showing the itemized cost of such chargeable service and requesting payment. Payment of the penalties shall be due within thirty 30 days of the date of the bill is deposited in the Mail. If full payment is not received within the required time for payment the bill will be delinquent and all persons liable for the penalties shall be charged interest at the maximum legal rate from the date the payment period expires and a further civil penalty in the amount of $100.00 per day. The delinquent costs may be placed as a lien against the property or collected by the City in any manner authorized bylaw and are recoverable in a civil action filed by the City in a court of competent jurisdiction.

(G) Liability for Expenses: In addition to the punishment provided by law a violator is liable for such costs expenses and disbursements paid or incurred by the City or any of its contractors in correction abatement and prosecution of the violation. Re-inspection fees to ascertain compliance with previously noticed or cited violations shall be charged against the owner of the establishment conducting the Deemed Approved Activity or owner of the property where the establishment is located. The Enforcement Officer shall give the owner or other responsible party of such affected premises a written notice showing the itemized cost of such chargeable service and requesting payment thereof. Should the bill not be paid in the required time, the charges shall be placed as a lien against the property.

C. AUTOMOBILE SALES

Automobile sales dealerships, new and/or used, in the City must conform with the intent of this Development Code and shall enhance and promote the image of the City. A Development Permit shall be required for automobile sales dealerships of new vehicles and a Conditional Use Permit shall be required for automobile sales dealerships of used vehicles, and all dealerships must be constructed in the following manner:

1. The minimum site area shall be 15,000 square feet, except CR-4 where one acre minimum is required.

2. All parts, accessories, etc., shall be stored within a fully enclosed structure.

3. Service and associated car storage areas shall be completely screened from public view.

4. All on-site lighting shall be stationary and directed away from adjoining properties and public rights-of-way.

5. All landscaping shall be installed and permanently maintained pursuant to the provisions of Chapter 19.28 (Landscaping Standards).

6. All on-site signage shall comply with the provisions of Chapter 19.22 (Sign Standards).

7. All loading and unloading of vehicles shall occur on-site and not in adjoining streets or alleys.

8. All vehicles associated with the business shall be parked or stored on-site and not in adjoining streets and alleys.

9. An adequate on-site queuing area for service customers shall be provided. Required parking spaces may not be counted as queuing spaces.

10. No vehicle service or repair work shall occur except within a fully enclosed structure. Service bays with individual access from the exterior of the structure shall not directly face or front on a public right-of-way.

11. All on-site parking shall comply with provisions of Chapter 19.24 (Off-Street Parking Standards). A parking plan shall be developed as part of the permit review process.

12. Every parcel with a structure shall have a trash receptacle on the premises. The trash receptacle shall comply with adopted Public Works Department standards and be of sufficient size to accommodate the trash generated. The receptacle(s) shall be screened from public view on at least three sides by a solid wall six feet in height and on the fourth side by a solid gate not less than five feet in height. The gate shall be

maintained in working order and shall remain closed except when in use. The wall and gate shall be architecturally compatible with the surrounding structures.

D. AUTOMOBILE DISMANTLING

Automobile dismantling establishments are subject to Conditional Use Permit review and shall be constructed in the following manner:

1. The minimum site area shall be 15,000 feet.

2. The site shall be entirely paved, except for structures and landscaping, so that vehicles are not parked in a dirt or otherwise not fully improved area.

3. All landscaping shall be installed and permanently maintained pursuant to the provisions of Chapter 19.28 (Landscaping Standards).

4. All stored, damaged, or wrecked vehicles shall be effectively screened so as not to be visible from adjoining properties or public rights-of-way.

5. Service access shall be located at the rear or side of structure(s) and as far as possible from adjoining residential uses.

6. Repair activities and vehicle loading and unloading shall be prohibited on adjoining streets and alleys.

7. Service bays with individual access from the exterior of the structure shall not face the public right-of-way.

8. Every parcel with a structure shall have a trash receptacle on the premises. The trash receptacle shall comply with adopted Public Works Department standards and be of sufficient size to accommodate the trash generated. The receptacle(s) shall be screened from public view on at least three sides by a solid wall six feet in height and on the fourth side by a solid gate not less than five feet in height. The gate shall be maintained in working order and shall remain closed except when in use. The wall and gate shall be architecturally compatible with the surrounding structures.

9. All on-site lighting shall be stationary and directed away from adjoining properties and public rights-of-way.

10. All on-site signage shall comply with the provisions of Chapter 19.22 (Sign Standards).

11. All repair activities and operations shall be conducted entirely within an enclosed structure. Outdoor hoists shall be prohibited.

12. All repair facilities shall close all windows when performing body and fender work, hammering, sanding or other noise-generating activity. Exterior noise shall not exceed 65 dBA at the property line.

13. All on-site parking shall comply with the provisions of Chapter 19.24 (Off-Street Parking Standards). A parking plan shall be developed as part of the permit review process.

14. The premises shall be kept in a neat and orderly condition at all times.

15. All used or discarded automotive parts or equipment or permanently disabled, junked or dismantled vehicles shall be permanently screened from public view.

16. All hazardous materials resulting from the repair or dismantling operation shall be properly stored and removed from the premises in a timely manner. Storage, use and removal of toxic substances, solid waste pollution, and flammable liquids, particularly gasoline, paints, solvents and thinners, shall conform to all applicable federal, state and local regulations prior to issuance of a Certificate of Occupancy.

E. BONUS HEIGHT

Proposed structures within CR-2 zone shall have a maximum height limit of 100 feet. This section provides a special incentive to increase the maximum allowable height through a program which encourages such additional amenities as deemed desirable by the Commission. These amenities may include, but are not limited to, the following: MC 908 8/15/94

1. Mixed Use Developments (i.e., residential above commercial office and retail uses, restaurants, theaters, etc.);

2. Enhanced pedestrian activities;

3. Improved signage and additional landscaping;

4. Additional parking;

5. Ground level and second floor plazas;

6. Outdoor cafes;

7. Artistic sculptures and aquatic amenities; and

8. Day care facilities.

F. CONVENIENCE STORES

The retail sale of groceries, staples, sundry items and/or alcoholic beverages where the gross floor area is less than 5,000 square feet is subject to Conditional Use Permit review, and shall be constructed and operated in the following manner:

1. The minimum site area shall be 10,000 square feet.

2. The site shall have direct frontage along a major or secondary street. The site shall not have direct access on a local residential street.

3. One access drive may be permitted for each street frontage. The design and location of the access drive(s) shall be subject to the approval of the DRC.

4. No convenience store shall be located within a one-mile radius of another convenience store or less than 1,000 feet from an existing elementary, junior high school, or high school, as measured from one property line to another. Service stations that include a convenience store as an ancillary use are not subject to the distance restrictions from other convenience stores. Exceptions to the distance restrictions from schools may be considered on a case by case basis through the Conditional Use Permit Process, considering mitigating factors of circulation patterns, security and management plans and subject to recommendations from the affected school district. MC 963 3/18/96, MC 1210 7/5/06, MC 1345 2/7/11 MC 1381 12/19/12.

5. All on-site lighting shall be energy efficient, stationary and directed away from adjoining properties and public rights-of-way.

6. All on-site signage shall comply with the provisions of Chapter 19.22 (Sign Standards).

7. All landscaping shall be installed and permanently maintained pursuant to the provisions of Chapter 19.28 (Landscaping Standards).

8. All on-site parking shall comply with the provisions of Chapter 19.24 (Off-Street Parking Standards). A parking plan shall be developed as part of the permit review process.

9. The premises shall be kept in a neat and orderly condition at all times.

10. Every parcel with a structure shall have a trash receptacle on the premises. The trash receptacle shall comply with adopted Public Works Department standards and be of sufficient size to accommodate the trash generated. The receptacle(s) shall be screened from public view on at least three sides by a solid wall six feet in height and on the fourth side by a solid gate not less than five feet in height. The gate shall be maintained in working order and shall remain closed except when in use. The wall and gate shall be architecturally compatible with the surrounding structures.

11. If on-site dispensing of automotive fuels is provided, the design, location and operation of these facilities shall be consistent with the provisions of Section 19.06.030(2)(O)(Service Station Standards). Additionally, the cashier location shall provide direct visual access to the pump islands and the vehicles parked adjacent to the islands.

12. A bicycle rack shall be installed in a convenient location visible from the inside of the store.

13. Each convenience store shall provide a public restroom located within the store.

14. Public pay telephones provided on-site shall not be set up for incoming calls. Public telephones shall be featured with call out service only.

15. On-site video games may not be installed or operated on the premises.

16. A convenience store adjacent to any residentially designated district shall have a six-foot high decorative masonry wall along property lines adjacent to such districts.

17. All parking, loading, circulation aisles, and pump island bay areas shall be constructed with (PCC) concrete.

G. DAY CARE CENTERS

Refer to Section 19.04.030(2)(B).

H. DRIVE-THRU RESTAURANTS

This Section contains standards for drive-thru restaurants as well as prohibition of same in specified zones. Drive-thru restaurants are subject to Conditional Use Permit review.

1. Establishments providing drive-thru facilities may be permitted in the CG-1, CG-2, CG-3, CG-4, CR-2 (on properties in the Freeway Corridor Overlay Zone with frontage on 5th Street only) and CR-3 (south of I-10 only and adjacent to Tippecanoe Avenue between Hospitality Lane and I-10 only) zones. MC 1098 7/5/01; MC 1338 11/15/10

2. Pedestrian walkways should not intersect the drive-thru drive aisles, but where they do, they shall have clear visibility, and they must be emphasized by enriched paving or striping.

3. Drive-thru aisles shall have a minimum 12-foot width on curves and a minimum 11-foot width on straight sections.

4. Drive-thru aisles shall provide sufficient stacking area behind menu board to accommodate a minimum of six cars.

5. All service areas, restrooms and ground mounted and roof mounted mechanical equipment shall be screened from view.

6. Landscaping shall screen drive-thru or drive-in aisles from the public right of way and shall be used to minimize the visual impact of readerboard signs and directional signs.

7. Drive-thru aisles shall be constructed with (PCC) concrete.

8. Parking areas and the drive-thru aisle and structure shall be set back from the ultimate curb face a minimum of 25 feet.

9. Menu boards shall be a maximum of 30 square feet, with a maximum height of seven feet, and shall face away from the street.

10. Drive-thru restaurants within an integrated shopping center shall have an architectural style consistent with the theme established in the center. The architecture of any drive-thru restaurant must provide compatibility with surrounding uses in form, materials, colors, scale, etc. Structure plans shall have variation in depth and angle to create variety and interest in its basic form and silhouette. Articulation of structure surface shall be encouraged through the use of openings and recesses which create texture and shadow patterns. Structure entrances shall be well articulated and project a formal entrance through variation of architectural plane, pavement surface treatment, and landscape plaza.

11. No drive-thru aisles shall exit directly onto a public right-of-way.

DRIVE-THRU RESTAURANT

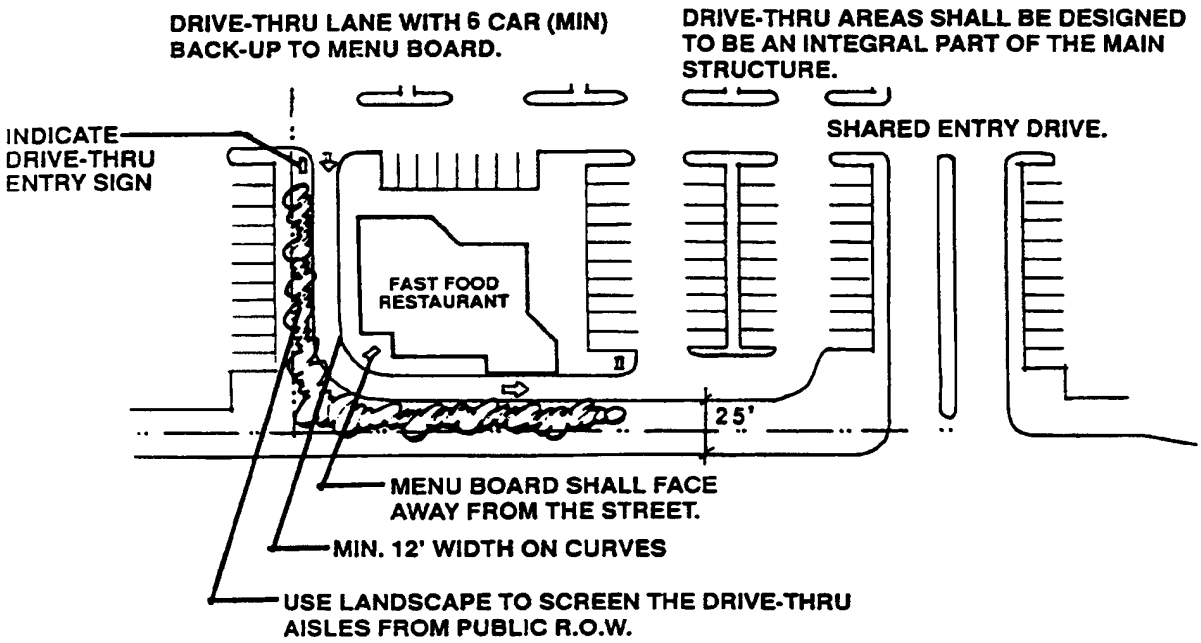

I. INDOOR RETAIL CONCESSION MALLS

Indoor retail concession malls are subject to a Conditional Use Permit and shall comply with the following standards:

1. Additional refuse containers may be required.

2. A centralized loading area is required.

3. A parking study may be required which addresses available off-street parking for establishments which are proposed for tenant suites within existing multi-tenant, commercial centers.

4. Indoor retail concession malls shall be considered to be one tenant for purposes of Development Code sign standards. MC 825 3/16/92

J. MICROBREWERIES/WINERIES

Microbreweries and wineries may be established subject to Minor/Conditional Use Permit review and shall be constructed in the following manner:

1. Fifty percent of the total building square footage may be used for production and storage of beer produced on the premises.

2. Accessory uses may include but are not limited to food/beverage service and live entertainment and are subject to a Conditional Use Permit.

3. All on-site parking shall comply with provisions of Chapter 19.24 (Off-Street Parking).

4. All on-site signage shall comply with the provisions of Chapter 19.22 (Sign Standards).

5. Service access shall be located at the rear or side of structure(s) and as far as possible from adjoining residential uses. MC 997 7/7/97, MC 1381 12/19/12

K. MINI-MALLS

Mini-malls (small scale, up to 30,000 square feet, multi-tenant shopping centers) are subject to a Conditional Use Permit and shall comply with the following standards:

1. All development and operational standards outlined in Section 19.06.030(2)(F)(Convenience Stores), except for item numbers 4 and 17 shall apply.

2. The development shall provide internal continuity, uniformity, and compatibility relating to architectural design, vehicular and pedestrian access, and on-site provisions for landscaping, loading, parking, and signage.

3. To the extent feasible, the on-site vehicular circulation system shall provide continuity with adjacent and similar commercial developments.

4. No outdoor displays or sale of merchandise shall be permitted. However, limited outdoor sales may be allowed pursuant to Chapter 5.22 of the Municipal Code. MC 972 6/3/96

5. Every parcel with a structure shall have a trash receptacle on the premises. The trash receptacle shall comply with adopted Public Works Department standards and be of sufficient size to accommodate the trash generated. The receptacle(s) shall be screened from public view on at least three sides by a solid wall six feet in height and on the fourth side by a solid gate not less than five feet in height. The gate shall be maintained in working order and shall remain closed except when in use. The wall and gate shall be architecturally compatible with the surrounding structures.

L. MINI-STORAGE

Mini-storage facilities are subject to a Conditional Use Permit and shall be constructed in the following manner:

1. The minimum site area shall be 20,000 square feet.

2. The site shall be entirely paved, except for structures and landscaping.

3. All on-site lighting shall be energy efficient, stationary and directed away from adjoining properties and public rights-of-way.

4. All landscaping shall be installed and permanently maintained pursuant to the provisions of Chapter 19.28 (Landscaping Standards).

5. All on-site signage shall comply with the provisions of Chapter 19.22 (Sign Standards).

6. The site shall be completely enclosed with a six-foot high solid decorative masonry wall, except for points of ingress and egress (including emergency fire access) which shall be properly gated. The gate(s) shall be maintained in good working order and shall remain closed except when in use.

7. No business activity shall be conducted other than the rental of storage spaces for inactive storage use.

8. All storage shall be located within a fully enclosed structure(s).

9. No flammable or otherwise hazardous materials shall be stored on-site.

10. Residential quarters for a manager or caretaker may be provided in the development.

11. The development shall provide for two parking spaces for the manager or caretaker, and a minimum of five spaces located adjacent or in a close proximity to the manager's quarters for customer parking.

12. Aisle width shall be a minimum of 25 feet between buildings to provide unobstructed and safe circulation.

13. Every parcel with a structure shall have a trash receptacle on the premises. The trash receptacle shall comply with adopted Public Works Department standards and be of sufficient size to accommodate the trash generated. The receptacle(s) shall be screened from public view on at least three sides by a solid wall six feet in height and on the fourth side by a solid gate not less than five feet in height. The gate shall be maintained in working order and shall remain closed except when in use. The wall and gate shall be architecturally compatible with the surrounding structures.

14. Storage facilities located adjacent to residential districts shall have their hours of operation restricted to 7:00 A.M. to 9:00 P.M., Monday through Saturday, and 9:00 A.M. to 9:00 P.M. on Sundays.

M. MIXED USE COMMERCIAL AND RESIDENTIAL DEVELOPMENT (INCLUDING ARTIST COLONY AND COMBINATION RESIDENCE/ OFFICE MC 1218 3/6/06

Vertical and/or horizontal mixed-use developments containing a mix of office and retail uses, but no residential uses, are permitted in the CO, CG-1, CG-2, CG-3, CR-1, CR-2, CR-3, CH and CCS-1 zones. Horizontal and/or vertical mixed-use developments containing a mix of residential, commercial and/or office uses are permitted in the CO, CG-1, CG-2, CG-3, CR-1, CR-2, CR-3 and CCS-1 zones. Mixed-use development having commercial uses mixed with residential uses shall be constructed, maintained, and operated in the following manner:

1. Development Standards for mixed use development containing one or more dwellings, including live/work units, shall be as specified in Table 6.02 Commercial Zones Development Standards. Multi-family dwelling units in mixed use development containing commercial uses shall be constructed in compliance with Section 19.04.030 (2) (L) Multi-Family Housing Standards. Mixed use development not containing multi-family apartment dwelling units and containing only single family units, townhomes and/or condominium dwelling units and commercial land uses shall be exempt from Section 19.04.030 (2) L and be constructed in compliance with the following development standards:

    a. Each dwelling unit shall provide a minimum of 300 square feet of private useable open space (which may include private (walled) patio, balcony, and/or roof deck). Private useable open space areas shall not include: right-of-ways; vehicle parking areas: areas adjacent to or between any structures less than six feet apart, required front, rear, and side yard setbacks from property lines; or keep slope areas greater than six percent.

    b. Each non-live/work dwelling unit shall have a private (walled) patio, balcony, and/or roof deck not less than 150 square feet in area and having a minimum width of 10 feet and depth of 10 feet.

    c. Mixed use developments containing one or more dwelling units, including live/work units, shall provide recreational amenities, within the site which

may include: a swimming pool; spa; clubhouse; tot lot with play equipment; picnic shelter–barbecue area; court game facilities such as tennis, basketball, or racquetball; improved softball or baseball fields; or, daycare facilities. The type of amenities shall be approved by the Director and provided according to the following schedule:

Units	Amenities
0 – 11	0
12 – 50	1
51 – 100	2
101 – 200	3
201 – 300	4

Add one amenity for each 100 additional units or fraction thereof.

d. Locations of Off-Street Parking. Spaces for residential uses shall be located within 150 feet from the dwelling unit (front or rear door) for which the parking space is provided.

e. Private Enclosed Storage Approaches. Each dwelling unit in a mixed use development shall be provided a minimum of 150 cubic feet of private enclosed storage space within the garage, or immediately adjacent tot he dwelling unit.

f. Community Entry Driveway Approaches. Driveway approaches accessing a public street in a mixed use development of 12 or more units shall be delineated with interlocking pavers, rough-textured concrete, or stamped concrete.

g. Washing Machine and Dryer. Each dwelling unit shall be plumbed and wired for a washing machine and dryer.

h. Building Separation. The distance between buildings containing one or more dwelling units in a mixed use development shall be a minimum of 6 feet (excluding roof overhangs and fireplace chimneys); and, at a minimum, shall comply with the requirements of the City's building code. A live/work unit that does not have a wall or roof in common with any other building or structure may either be constructed with no side yard separation of distance between units (i.e., double exterior walls separating units), or shall be a minimum of six feet (excluding roof overhangs and fireplace chimneys). Notwithstanding the above, the distance between dwelling units separated by an entry courtyard and facing another structure shall be a minimum of 15 feet. In the event that the front of the units are internally oriented to face one another, then a minimum 15-foot building separation is required between the fronts of the units.

i. The maximum structure height in the CG-2 and CG-3 zones shall be four stories (not to exceed 56 feet).

2. Land Use Activities in Mixed Use Buildings Having Residential Units. Land use activities where residential and commercial land use activities are allowed to mix shall be any land use activity permitted by right and/or subject to approval of a Conditional Use Permit in the land use district governing the premises; provided, however, that in order to enhance the success of businesses in mixed use buildings and protect the health and safety of persons who reside in a mixed use building, the following land use activities shall not be permitted:

a. Automotive related uses,

b. Boarding/lodging facilities,

c. Home improvements with outdoor display,

d. Indoor retail concession malls,

e. Mini-malls

f. Nurseries/garden supplies,

g. Publishing/printing plants,

h. Recycling facilities,

i. Recycling facilities (reverse vending only),

j. Veterinary services/animal boarding,

k. Funeral parlors/mortuaries,

l. Single-price overstock/discount stores,

m. Adult-oriented businesses (see Section 19.06.030(2)(A) for specific definition of terms,

n. Turkish baths,

o. Commercial saunas,

p. Fortune tellers,

q. Tattoo parlors and/or body piercing studios,

r. Aroma therapy boutiques,

s. Oxygen boutiques,

t. Second hand stores/thrift stores

u. Check-cashing facilities, and

v. Pawn shops

3. Home Occupations are allowed in compliance with Chapter 19.54 in townhome, condominium, and detached single family units only.

4. Parking Requirements. As specified for each use in the Development Code.

5. Signage. A signage program shall be submitted as part of the site development permit application package, addressing proposed monument, ladder and/or individual property signage.

6. Public Telephones. Exterior public pay telephones are prohibited.

7. Conditions, Covenants, and Restrictions (CC&Rs). CC&Rs shall be reviewed and subject to the approval of the Development Services Deputy Director/City Planner. The CC&Rs shall list restricted uses. At a minimum, the property owners association will be responsible for maintaining concrete and asphalt paved areas, fences and walls, and landscape areas exterior to private yards and private open space; and common areas. The property owners association will be responsible for controlling hours of business, visitor and guest parking, and enforcing standards established for the exterior of the structures.

8. Live/Work Units. A dwelling constructed, maintained, and operated having commercial and residential uses is classed as a Live/Work Unit and shall adhere to the requirements for Mixed Use Residential and Commercial Development, with the following standards and exceptions:

a. Permitted Dwelling Types. Live/work units shall be townhome, condominium and/or detached single family units only.

b. Commercial Land Use Activities in Live/Work Units. The following land use activities shall not be permitted in live/work units:

1) Night clubs/bars/lounges,

2) Entertainment/recreation,

3) Medical/care facilities/social services,

4) Tanning salons,

5) Dry cleaners,

6) Health/athletic clubs,

7) Laundromats (self-serve),

8) Convenience stores,

9) Drug stores,

10) Supermarkets,

11) Liquor stores,

12) Mobile home sales, and

13) Religious facilities.

c. Minimum Dwelling Size Standards. The minimum dwelling unit area for each live/work unit shall be not less than 1,000 square feet, exclusive of work area; and the minimum dwelling unit area for Artist Colony dwelling units shall not be less than 750 square feet.

d. Hazardous Activities. Storage of hazardous materials necessary for work activities in live/work units may be stores in controlled areas per the current Uniform Building Code/Uniform Fire Code used by the City of San Bernardino. Hazardous activities including but not limited to welding, open flame, or storage of flammable liquids, storage of hazardous materials, or similar hazardous operations are not permitted in live/work units without express written approval from the Fire Department, which shall impose the appropriate requirements for such approval.

e. Open Space. Each live/work unit shall provide a minimum 300 square feet of useable private open space; or, a minimum of 120 square feet of usable private open space and 300 square feet of common useable open space. Useable private open space areas may include private (walled) patios, balconies, and/or roof decks. Useable private open space areas shall not include right-of-way, private streets or driveways, vehicle-parking areas, required setbacks from property lines, or slope areas greater than 6 percent.

f. Entries. With the exception of Artist Colony units, the work area in a live/work unit is required to have either separate access entry or, if approved by the Director, a shared live/work entry on the grade level of the unit. Each live/work unit shall be provided a primary entry from common areas such as hallways, corridors, and/or exterior portions of the building such as courtyards, breezeways, parking areas, and public spaces.

g. Work Area. With the exception of Artist Colony units, each live/work unit shall have a minimum of 300 square feet of floor area designed and constructed as work area.

h. Walls Facing Street and/or Parking Lot. Excluding professional live/work units, ground floor exterior walls facing a street and/or a parking lot shall have one store front window having a minimum height of 3 feet and width of 5 feet.

i. Vehicle Parking Requirements. One space for each 250 square feet of cumulative gross floor area of work area in the live/work units in the mixed use development; and 2 covered spaces within an enclosed garage for each live/work unit, plus 1 uncovered off-street guest parking space for every 5 live/work units.

j. Tandem Parking. Unattended tandem parking will be permitted if the Deputy Director/City Planner determines that such parking would be appropriate and effectively used.

k. Loading spaces are not required for the commercial components of a live/work unit provided the work area of the live/work unit does not exceed 700 square feet of floor area.

l. Noise. Noise levels generated by a live/work unit shall conform to the requirements of the Municipal Code for residential use.

m. Business Hours. Hours of operation for businesses serving customers on-site from live/work units shall be limited to 7:00 a.m. to 7:00 p.m. Monday through Friday, and from 9:00 a.m. to 5:00 p.m. Saturday and Sunday.

n. No Separation Sale or Rental. No portion of a live/work unit may be separately rented or sold as a commercial space for a person or persons not living in the premises or as a residential space for a person or persons not working in the same unit.

o. Businesses in Live/Work Units. Conducting a business in the work area of a live/work unit is an opportunity for those whose home-based businesses will blend with the unique environment. Conducting a business in the work area is not required.

p. Arcade/Pinball and Arcade Video Games. On-site arcade/pinball machines and arcade video games may not be installed or operated in the work area of a live/work unit.

q. Employment. A business conducted in a work area of a live/work unit may have on the premises at any given time a maximum of three part-time and/or

full-time employees, or a combination not exceeding four employees on the premises. There is no limit to resident-family-member-employees.

r. Pre-wired. Each live/work unit shall have a minimum of 200 amp electric service. Each live/work unit shall be pre-wired for telephone, cable television, and computer Internet. Each live/work unit shall be pre-wired for a security system approved by the Police Department.

9. Professional Live/Work Unit. A dwelling constructed, maintained, and operated having commercial uses restricted to Studio/Artist and Creative/Tech-based offices and services, and/or Professional offices and services (including combination residence/office), and primarily non-retail uses in the work area, is classed as a Professional Live/Work unit.

a. The following types of live/work units are Profession Live/Work Units:

1) Studio/Artist and Creative/Tech-based offices and services. Activities in these live/work units include, but are not limited to, artist studios and non-traditional live and work space for technology art and graphics-based professional activities and services such as web and software-based application and development, animation, multimedia development, programming, research, and other similar uses which do not require intensive customer traffic.

2) Professional offices and services. Activities in these live/work units include, but are not limited to, tax preparation, accounting, financial planner, architecture, landscaping architecture, engineering and planning consultant services, graphic and arts, attorney, chiropractor, internet or web oriented businesses, and other similar uses which do not require intensive customer traffic.

b. Professional Live/Work Units (including but not limited to Combination Residence/Office in the CO zone) shall be constructed, maintained, and operated as live/work units, with the following additional standards and exceptions:

1) Land use activities in professional live/work units. Residential uses shall be condominium, townhome, and/or single family detached dwellings only. In addition to the land use activities prohibited in live/work units, no retail sales shall occur in a live/work unit designated as a “professional live/work unit” unless the sales products are jewelry, art products such as ceramics, paintings, graphics, pottery, sculpture, photography, or similar products, and/or the products of the occupant’s primary business located in the work area on the premises.

2) Occupancy. The residential portion of a Professional Live/Work unit shall only be occupied by the individual and his/her family that has their professional occupation or business established in the work areas of said unit.

3) Signage shall be restricted to signage attached to the dwelling and shall not exceed three (3) square feet for each dwelling unit containing a business.

4) Parking Requirements. One space for each 500 square feet of cumulative gross floor area; and 2 covered spaces in an enclosed garage for each professional live/work unit.

N. MOBILE VENDORS

Mobile vendors are permitted by temporary use permits only, in accordance with the provisions of Chapter 19.70. MC 1363 8/1/11

O. MULTI-FAMILY HOUSING

Refer to Section 19.04.030(2)(L).

P. NEIGHBORHOOD GROCERY STORES MC 1093 4/5/01

Neighborhood Grocery Stores (with or without alcohol) may be established subject to Conditional Use Permit and shall be operated in the following manner:

1. A maximum of seventy-five (75) square feet of the sales area may be used for the display or sale of alcohol.

2. The primary business must be a full service grocery store (fresh fruit, vegetables, meat and fish) with food preparation facilities on site.

3. No gasoline sales are allowed.

4. The hours of operation are limited to 7:00am to 9:00pm.

5. The sale of alcohol is limited to off-sale of beer and wine only, with no single sales.

6. All parking shall comply with provision of Chapter 19.24 (Off-Street Parking).

7. All signage shall comply with the provisions of Chapter 19.22 (Sign Standards).

8. Periodic inspections may be required.

Q. RECYCLING FACILITIES FOR REUSABLE DOMESTIC CONTAINERS

Recycling facilities are subject to permit review in all commercial and industrial zones according to the following schedule:

Type of Facility	Zones Permitted	Permit Required
Reverse Vending Machine(s)	All Commercial and Industrial	Development Permit and up to 5 reverse vending machines
Small Collection	CG-1, CG-2, CR-3 (So. of I-10) & All Industrial	Development Permit
Large Collection	CH and All Industrial	Conditional Use Permit
Light Processing	All Industrial	Conditional Use Permit
Heavy Processing	All Industrial	Conditional Use Permit

1. For the purposes of this Section, the following definitions shall apply:

   a. Collection Facility. A center for the acceptance by donation, redemption or purchase of recyclable materials from the public, which may include the following:

      1) Reverse vending machine(s);

      2) Small collection facilities which occupy an area of less than 500 square feet and may include:

         a) A mobile unit;

         b) Bulk reverse vending machines occupying more than 50 square feet; and

         c) Kiosk-type units which may include permanent structures.

      3) Large collection facilities which may occupy an area of more than 500 square feet and may include permanent structures.

   b. Mobile Recycling Unit. An automobile, truck, trailer, or van, licensed by the Department of Motor Vehicles which is used for the collection of recyclable materials, including bins, boxes, or containers transported by trucks, vans, or trailers, and used for the collection of recyclable materials.

   c. Convenience Zones. An area within a ½ mile radius of a supermarket.

d. Supermarket. A full-service, self-service retail store with gross annual sales of 2,000,000 dollars or more, and which sells a line of dry grocery, canned goods, or non-food items and some perishable items.

e. Processing Facility. A building or enclosed space used for the collection and processing of recyclable materials to prepare for either efficient shipment, or to an end-user's specifications by such means as baling, briquetting, compacting, flattening, grinding, crushing, mechanical sorting, shredding, cleaning and remanufacturing. Processing facilities include the following:

1) Light processing facility occupies an area of under 45,000 square feet of collection, processing and storage area, and averages two outbound truck shipments per day. Light processing facilities are limited to baling, briquetting, crushing, compacting, grinding, shredding and sorting of source separated recyclable materials sufficient to qualify as a certified processing facility. A light processing facility shall not shred, compact, or bale ferrous metals other than food and beverage containers.

2) A heavy processing facility is any processing facility other than a light processing facility.

f. Recycling Facility. A center for the collection and/or processing of recyclable materials. A certified recycling facility or certified processor is certified by the California Department of Conservation as meeting the requirements of the California Beverage Container Recycling and Litter Reduction Act of 1986. A recycling facility does not include storage containers located on a residential, commercial or manufacturing designated parcel used solely for the recycling of material generated on the parcel.

g. Recycling or Recyclable Material. Reusable domestic containers including but not limited to metals, glass, plastic and paper which are intended for reuse, remanufacture, or reconstitution for the purpose of using in altered form. Recyclable material does not include refuse or hazardous materials.

h. Reverse Vending Machine. An automated mechanical device which accepts at least 1 or more types of empty beverage containers including, but not limited to aluminum cans, glass and plastic bottles, and issues a cash refund or a redeemable credit slip with a value not less than the container's redemption value as determined by the State. A reverse vending machine may sort and process containers mechanically provided that the entire process is enclosed within the machine. In order to accept and temporarily store all container types in a proportion commensurate with their relative redemption rates, and to meet the requirements of certification as a recycling facility, multiple grouping of reverse vending machines may be necessary.

A bulk reverse vending machine is a reverse vending machine that is larger than 50 square feet, is designed to accept more than 1 container at a time and will pay by weight instead of by container.

2. The standards for recycling facilities are as follows:

a. Reverse vending machine(s) located within a commercial structure shall require a Development Permit, shall not require additional parking spaces for recycling customers, and may be permitted in all commercial and industrial zones subject to compliance with the following standards:

1) Shall be installed as an accessory use to a commercial use which is in full compliance with all applicable provisions of this Development Code and the Municipal Code;

2) Shall be located within 30 feet of the entrance to the commercial structure and shall not obstruct pedestrian or vehicular circulation;

3) Shall not occupy parking spaces required by the primary use;

4) Shall occupy no more than 50 square feet of floor space per installation, including any protective enclosure, and shall be no more than eight feet in height;

5) Shall be constructed and maintained with durable waterproof and rustproof material;

6) Shall be clearly marked to identify the type of material to be deposited, operating instructions, and the identity and phone number of the operator or responsible person to call if the machine is inoperative;

7) Shall have a sign area of a maximum of four square feet per machine, exclusive of operating instructions;

8) Shall be maintained in a clean, sanitary, and litter-free condition on a daily basis;

9) Operating hours shall be consistent with the operating hours of the primary use;

10) Shall be illuminated to ensure comfortable and safe operation if operating hours are between dusk and dawn; and

11) Shall maintain an adequate on-site refuse container for disposal of non-hazardous waste.

b. Small collection facilities that are required as Certified Recycling Centers by the California Public Resources Code or that are operated as drop boxes by valid non-profit organizations only, and which are located within applicable commercial and industrial zones shall be subject to a Development Permit, and comply with the following standards:

1) Shall be installed as an accessory use to an existing commercial use which is in full compliance with all applicable provisions of this Development Code and the Municipal Code;

2) Shall be no larger than 500 square feet and occupy no more than five parking spaces not including space that will be periodically needed for removal of materials or exchange of containers;

3) Shall be set back at least 10 feet from any public right-of-way, and not obstruct pedestrian or vehicular circulation;

4) Shall accept only glass, metals, plastic containers, papers and reusable items;

5) Shall use no power-driven processing equipment except for reverse vending machines;

6) Shall use containers that are constructed and maintained with durable waterproof and rustproof material, covered when site is not attended, secured from unauthorized entry or removal of material, and shall be of a capacity sufficient to accommodate materials collected and collection schedule;

7) Shall store all recyclable material in the mobile unit vehicle and shall not leave materials outside of the unit when attendant is not present;

8) Shall be maintained in a clean and sanitary manner free of litter and any other undesirable materials, including mobile facilities;

9) Shall not exceed noise levels of 65 dBA as measured at the property line of adjacent residential land use districts;

10) Attended facilities shall not be located within 100 feet of any residential land use district;

11) Collection containers, site fencing, and signage shall be of such color and design so as to be compatible with and to harmonize with the surrounding uses and neighborhood;

12) Containers shall be clearly marked to identify the type of material which may be deposited; the facility shall be clearly marked to identify

the name and telephone number of the facility operator and the hours of operation and display a notice stating that no material shall be left outside the recycling enclosure of containers;

13) Signs may be provided as follows:

a) Recycling facilities may have identification signs with a maximum of 15% per side of a structure or 16 square feet, whichever is greater. In the case of a wheeled facility, the side will be measured from the ground to the top of the container;

b) Signs shall be consistent with the character of their location; and

c) Directional signs, consistent with Chapter 19.22 (Sign Standards), bearing no advertising message may be installed with the approval of the Director if found necessary to facilitate traffic circulation or if the facility is not visible from the public right-of-way.

14) The facility shall not impair the landscaping required by Chapter 19.28 (Landscaping Standards) for any concurrent use;

15) No additional parking space shall be required for customers of a small collection facility located at the established parking lot of the primary use. One space will be provided for the attendant, if needed;

16) Mobile recycling units shall have an area clearly marked to prohibit other vehicular parking during hours when the mobile unit is scheduled to be present;

17) Occupation of parking spaces by the facility and by the attendant shall not reduce available parking spaces below the minimum number required for the primary use unless all of the following conditions exist:

a) A parking study shows that existing parking capacity is not already fully utilized during the time the recycling facility will be on the site; and

b) The permit shall be reviewed at the end of 18 months.

18) Small collection facilities shall not be 24 hour operations;

19) Small collection facilities may be subject to landscaping and/or screening as determined by the review authority; and

20) Shall maintain adequate refuse containers for the disposal of non-hazardous waste.

c. A large collection facility which is larger than 500 square feet, or on a separate parcel not accessory to a "primary" use, which has a permanent structure is permitted in the commercial, and industrial zones, subject to a Conditional Use Permit, and the following standards:

1) The facility does not abut a parcel designated or planned for residential use;

2) The facility shall be screened from the public right-of-way, within an enclosed structure;

3) Structure setbacks and landscape requirements shall be those provided for the land use district in which the facility is located;

4) All exterior storage of material shall be in sturdy containers which are covered, secured, and maintained in good condition. Outdoor storage shall be screened by a six-foot, solid decorative masonry wall. No storage, excluding truck trailers shall be visible above the height of the wall. No outdoor storage shall be permitted in the land use districts; which do not permit outdoor storage.

5) The site shall be maintained clean, sanitary and free of litter and any other undesirable materials, and will be cleaned of loose debris on a daily basis;

6) Space shall be provided on site for six vehicles to circulate and to deposit recyclable materials;

7) Four parking spaces for employees plus one parking space for each commercial vehicle operated by the recycling facility shall be provided on-site;

8) Noise levels shall not exceed 65 dBA as measured at the property line of adjacent residential land use districts;

9) If the facility is located within 500 feet of property designated, or planned for residential use, it shall not be in operation between 7:00 P.M. and 7:00 A.M.;

10) Any containers provided for after hours donation of recyclable materials shall be at least 50 feet from any residential land use district, permanently located, of sturdy rustproof construction, and shall have sufficient capacity to accommodate materials collected and be secure from unauthorized entry or removal of materials;

11) Donation areas shall be kept free of litter and any other undesirable material and the containers will be clearly marked to identify the type of material that may be deposited. The facility shall display a notice stating that no material shall be left outside the recycling containers;

12) The facility shall be clearly marked with the name and phone number of the facility operator and the hours of operation; identification and informational signs shall meet the standards of the land use district; and directional signs bearing no advertising message may be installed with the approval of the Director, if necessary to facilities traffic circulation; and

13) Adequate refuse containers for the disposal of non-hazardous waste shall be permanently maintained on-site.

d. Light processing facilities and large processors shall be permitted in all industrial zones subject to a Conditional Use Permit, and shall comply with the following standards:

1) The facility shall not abut a residentially designated parcel;

2) In the CH or IE zones, processors shall operate within a completely enclosed structure;

3) Power-driven processing shall be permitted provided all noise level requirements are met. Light processing facilities are limited to baling, briquetting, crushing, compacting, grinding, shredding and sorting of source-separated recyclable materials and repairing of reusable materials;

4) A light processing facility shall be no larger than 45,000 square feet and shall have no more than an average of two outbound truck shipments of material per day and shall not shred, compact or bale ferrous metals other than food and beverage containers;

5) Structure setbacks and landscaping requirements shall be those provided for the land use district in which the facility is located;

6) All exterior storage of material shall be in sturdy containers or enclosures which are covered, secured and maintained in good condition. Storage containers for flammable materials shall be constructed of non-flammable material. No storage excluding truck trailers shall be visible above the height of the required walls;

7) The site shall be maintained in a clean manner and free of litter and any other undesirable material(s). Loose debris shall be collected on a

daily basis and the site shall be secured from unauthorized entry and removal of materials when attendants are not present;

8) Space shall be provided on-site for the anticipated peak load of customers to circulate, park and deposit recyclable materials. If the facility is open to the public, a parking area shall be provided for a minimum of 10 customers at any one time;

9) One employee space shall be provided for each commercial vehicle operated by the processing center;

10) Noise levels shall not exceed 65 dBA as measured at the property line of residential land use districts;

11) If the facility is located within 500 feet of property designated or planned for residential use, it shall not be in operation between 7:00 P.M. and 7:00 A.M. The facility shall be administered by on-site personnel during the hours the facility is open;

12) Any containers provided for after-hours donation of recyclable materials shall be at least 100 feet from any residential land use district parcel, and shall be sturdy, rustproof construction, with sufficient capacity to accommodate materials collected, and shall be secure from unauthorized entry or removal of materials;

13) Donation areas shall be kept free of litter and any other undesirable material. The containers shall be clearly marked to identify the type of material that may be deposited. The facility shall display a notice stating that no material shall be left outside the recycling containers;

14) Signs shall be installed pursuant to Chapter 19.22 (Sign Standards). Additionally, the facility shall be clearly marked with the name and phone number of the facility operator and the hours of operation.

15) No dust, fumes, smoke, vibration or odor above ambient level shall be detectable from adjacent residentially designated parcels; and

16) The facility shall maintain adequate on-site refuse containers for the disposal of non-hazardous waste.

R. SALES AND PRODUCTION OF HANDICRAFT ITEMS

Facilities providing for the sales and production of handicraft items may be established subject to Development Permit review and shall be constructed in the following manner:

1. The sales and production of handicraft items shall be permitted only on parcels located within both the CR-2 zone and the Main Street Overlay.

2. The retail and service operations shall be contained within the main structure which houses the primary use.

3. Retail and service operations shall occupy a minimum of 15% of the total building square footage.

4. Accessory items not produced on site may be sold on the premises in addition to those products manufactured, warehoused and/or assembled on the premises.

5. Outside storage of materials shall be prohibited. MC 997 7/7/97

S. SENIOR CITIZEN/CONGREGATE CARE HOUSING STANDARDS

Refer to Section 19.04.030(2)(Q).

T. SERVICE STATION STANDARDS

Service stations are subject to a Conditional Use Permit and shall comply with the following standards:

1. New service stations shall be permitted only at the intersections of major and secondary arterials, and along major or secondary arterials with freeway off-ramps within the Freeway Corridor Overlay zone. Stations within the Freeway Corridor Overlay shall only be located at the intersection of the arterial with the freeway on- and off-ramps or with streets forming the boundary of the Freeway Corridor Overlay zone. A maximum of three service stations shall be permitted at each intersection, or on each side of the freeway along a major or secondary arterial with a freeway off-ramp within the Freeway Corridor Overlay zone, provided that at least one station offers only non-petroleum alternative fuel. MC 963 3/18/96; MC 1353 7/5/11; MC 1381 12/19/12

2. The minimum parcel size shall be 15,000 square feet, with a minimum street footage of 100 feet on each street.

3. All activities and operations shall be conducted entirely within an enclosed structure, except as follows:

   a. The dispensing of petroleum products, water and air from pump islands.

   b. The provision of emergency service of a minor nature.

   c. The sale of items via vending machines which shall be placed next to the main structure in a designated area not to exceed 32 square feet, and which must be screened from public view.

4. Pump islands shall be located a minimum of 20 feet from a street property line, however, a canopy or roof structure over a pump island may encroach up to 10 feet within this distance. Additionally, the cashier location shall provide direct visual access to the pump islands and the vehicles parked adjacent to the islands.

5. The maximum number of points of ingress/egress to any one street shall be 2.

6. There shall be a minimum distance of 30 feet between curb cuts along a street frontage.

7. No driveway may be located closer than 35 feet to the curb return.

8. The width of a driveway may not exceed 36 feet at the sidewalk.

9. On-site parking shall be provided at 1 space for each pump island, plus 1 space for each service bay.

10. Outside storage of motor vehicles is prohibited.

11. No vehicles may be parked on sidewalks, parkways, driveways or alleys.

12. No vehicle may be parked on the premises for the purpose of offering same for sale.

13. Landscaping shall comprise a minimum of 15% of the service station site area, exclusive of required setbacks, and shall be provided and permanently maintained according to the following regulations, as well as those contained in Chapter 19.28 (Landscaping Standards).

    a. A minimum five-foot wide (inside dimension), six-inch high planter area shall be provided along interior property lines, except for openings to facilitate vehicular circulation to adjacent properties. Where adjacent to a periphery wall, trees planted not more than 16 feet apart shall be included in the planter areas.

    b. A planter area of not less than 200 square feet shall be provided at the corner of 2 intersecting streets. Landscaping shall not exceed a height of 30 inches.

    c. A minimum of 50 square feet of planter area shall be located along those portions of the main structure fronting on a public street.

    d. Additional landscaping may be required to screen the service station from adjacent properties.

14. All on-site signage shall comply with the provisions of Chapter 19.22 (Sign Standards).

15. Openings of service bays shall not face public rights-of-way and shall be designed to minimize the visual intrusion onto adjoining properties.

16. No used or discarded automotive parts or equipment, or disabled, junked or wrecked vehicles may be located in any open area outside the main structure.

17. Every parcel with a structure shall have a trash receptacle on the premises. The trash receptacle shall comply with adopted Public Works Department standards and be of sufficient size to accommodate the trash generated. The receptacle(s) shall be screened from public view on at least three sides by a solid wall six feet in height and on the fourth side by a solid gate not less than five feet in height. The gate shall be maintained in working order and shall remain closed except when in use. The wall and gate shall be architecturally compatible with the surrounding structures.

18. All light sources, including canopy, perimeter, and flood shall be energy efficient, stationary and shielded or recessed within the roof canopy so that the service station shall be indirectly visible and light is deflected away from adjacent properties and public rights-of-way. Lighting shall not be of such a high intensity as to cause a traffic hazard or adversely affect adjoining properties. No luminaire shall be higher than 15 feet above finished grade.

19. Where an existing service station adjoins property in a residential land use district, a six-foot high decorative masonry wall shall be constructed at the time the station requires a permit for the on-site improvement/modification. Materials, textures, colors and design of the wall shall be compatible with on-site development and adjoining properties. When the wall reaches the established front-yard setback line of a residentially designated lot abutting or directly across an alley from the service station, it shall decrease to a height of 30 inches.

20. Restroom entrances viewable from adjacent properties or public rights-of-way shall be concealed from view by planters or decorative screening.

21. Noise from bells or loudspeakers shall not be audible beyond the property line at any time.

22. All parking, loading, circulation aisles, and pump island bay areas shall be constructed with (PCC) concrete.

U. SERVICE STATION CONVERSIONS

A structure originally constructed as a service station and which is proposed for conversion to another allowable use shall require upgrading and remodeling for such items as, but not limited to, removal of all gasoline appurtenances, removal of canopies, removal of pump islands, removal of gas tanks, removal of overhead doors, additional street improvements or modification of existing improvements to conform to access regulations, exterior remodeling, and any additional standards as required by this Development Code.

V. SINGLE FAMILY HOUSING, EXISTING

Additions, alterations and expansions to single-family units which legally existed in the commercial and industrial districts prior to June 3, 1991, shall comply with the RS, Residential Suburban, zone Standards. MC 823 3/2/92

W. SINGLE FAMILY/OFFICE CONVERSIONS MC 818 2/6/92

A structure originally constructed as a single family residence which is proposed for conversion to a low intensity office use shall require the following:

1. The building elevations and the landscaping between the front property line and the building front shall be maintained in their residential character.

2. Parking shall be provided to the rear of the structure. Access may be permitted from the original driveway if there is a minimum width of 10 feet.

3. Any trees with a trunk diameter greater than six inches shall be preserved. If it becomes necessary to remove a tree with a trunk diameter greater than six inches, each tree removed shall be replaced on a 2:1 ratio with 36-inch box trees.

4. If the rear property line abuts an alley, access to parking shall be provided from the alley whenever possible.

5. Where two or more single-family residences adjacent to one another are converted to office uses, reciprocal access and parking may be required.

6. Parking spaces shall be provided as determined at project review. To the greatest extent possible, professional office parking requirements shall be met. Landscaping requirements may be reduced to provide adequate parking.

7. Unattended tandem parking will be permitted if it is determined such parking would be appropriate and effectively used.

8. Parking lot landscaping may be reduced to 5% of the parking area (plus setbacks) if it is deemed necessary in order to provide adequate parking spaces.

9. Loading spaces are not required.

10. A monument sign shall be permitted with the following standards:

    Maximum height 4 feet.
    Maximum area 16 square feet.
    Minimum distance from property line 10 feet
    No illumination shall be permitted.

11. The structure shall be made to conform to the provisions of the Uniform Fire Code and the Uniform Building Code for commercial structures.

12. Trash receptacles should be placed to the rear of the structure and screened from view. Location and size of receptacles will be determined at project review.

X. SINGLE ROOM OCCUPANCY (SRO) FACILITIES (MC 809 10/7/91)

Single Room Occupancy (SRO) facilities are subject to Conditional Use Permit review and approval and shall conform to the following standards:

1. SROs shall not be located within 250 feet of a parcel which has a school for children, adult bookstore or theater, or liquor store. MC 878 6/7/93

2. SROs shall be located within ¼ mile of a bus stop.

3. SROs shall comply with the following parking requirements: One space per full time SRO employee at maximum shift and 1 per 10 occupants.

4. Secured bicycle or motorcycle spaces shall be provided at a ratio of one space per 10 occupants.

5. Any design of a SRO project shall coordinate with and complement the existing architectural style and standards of the surrounding land uses and local community. If a design theme has become established in an area, this should be reflected in the design and scale of the SRO project.

6. An unrestricted drop-off/pick-up/loading/temporary parking area shall be provided near a single entry located adjacent to front entry/desk area.

7. Exterior common areas and/or open courtyards should be provided throughout the project. If common areas are made available, these areas should be designed to provide passive open space with tables, chairs, planters, or small garden spaces to make these areas useful and functional for the residents. Exterior common areas, including parking areas, should be illuminated with a minimum of two footcandles by low pressure sodium lighting from dusk to dawn.

8. Each SRO unit shall be provided with the following minimum amenities:

    a. Adequate heating and air conditioning. (Window air conditioning units are not permitted. Air conditioning units may be installed for each SRO unit as long as they are flush with the exterior wall surface.)

    b. Kitchen sink with garbage disposal.

    c. Counter top measuring a minimum of 12 inches deep and 24 inches wide.

d. Space and proper wiring for a microwave and small refrigerator. (These appliances must be available for rent.)

e. Pre-wired for telephone and cable television.

f. Toilet and sink in a separate room that is a minimum of 20 square feet.

g. One bed space per person.

h. One closet per person.

i. One storage/desk arrangement per person.

j. Intercom system.

k. Lockable door, which is a minimum of 36 inches wide, opens inward, and has a reprogrammable key card access from a secured enclosed interior hallway or common area.

9. The maximum occupancy and minimum unit size (not including toilet compartments) shall be:

1 person - 150 square feet.
2 persons - 175 square feet.
The maximum unit size shall be 325 square feet.

10. Elevators shall be required on new SROs which are 3 stories or more in height.

11. A full common kitchen facility shall be provided on each floor, if complete kitchens are not provided in each unit. Complete kitchen shall include a microwave, sink with garbage disposal, and refrigerator. Other cooking appliances or facilities shall be prohibited in each SRO unit, unless approved in writing by the management staff. MC 878 6/7/93

12. If complete bathrooms are not provided in each unit, shared showers shall be provided at a ratio of 1 per 7 occupants or fraction thereof on the same floor with interior lockable doors. These shall be directly accessible from indoor common areas or indoor hallways.

13. SRO facilities shall provide for 1 handicapped-accessible unit for every 25 units or fraction thereof for up to 100 units and 1 handicapped-accessible unit for every 40 units or fraction thereof for the number of units over 100.

14. At least 1 janitor closet and trash chute shall be provided on each floor.

15. Common laundry facilities shall be provided with 1 washer and 1 dryer for every 25 units or fraction thereof for up to 100 units and 1 washer and 1 dryer for every 50 units or fraction thereof for the number of units over 100. Keyed access for tenants

only shall be provided. Defensible space concepts should be employed in the design and location of the laundry facility areas.

16. Common furnished and secured indoor space shall be provided at the following ratios:

    4.5 sq. ft. per 150 to 159 sq. ft. unit
    4.0 sq. ft. per 160 to 169 sq. ft. unit
    3.5 sq. ft. per 170 to 179 sq. ft. unit
    3.0 sq. ft. per 180 and up sq. ft. unit

    Common indoor space means all useable interior common areas not used for circulation or service facilities. Common indoor space includes lobby, recreation room or reading room.

17. Ingress and egress shall be strictly limited and monitored by the use of a front desk area which has a full view of the entry/lobby area, is staffed 24 hours a day, 7 days a week, and has an operational outdoor entry intercom system with intercoms in each unit and common areas. Entrance into the hallways of common areas where individual units are located shall be regulated by the front desk clerk through the use of "buzz-in" doors. Each resident and guest must be cleared by the front desk clerk before entry is permitted. The required secondary egress areas shall also be alarmed and monitored. A notice shall be posted in the common indoor lobby area regarding contact procedures to investigate code compliance problems. At least 1 pay telephone, a drinking fountain and individual mail boxes shall be provided in the lobby/front desk area.

18. An adequately sized supply room shall be provided with adequate security control.

19. SROs of any size shall be required to have fully automatic fire sprinkler systems with a central monitoring system, alarm and fire annunciator in compliance with Fire Department standards. A manual fire alarm system shall also be installed.

20. All provisions of the Uniform Building Code and Uniform Fire Code must be complied with for hotels. However, reasonable equivalent alternatives to Fire and Building Code requirements may be utilized, if approval is obtained from the Chief Building Official and Fire Chief on a case-by-case, item-by-item basis.

21. Defensible space concepts should be employed in the design and location of SROs.

22. Interior hallways shall be brightly lit with at least 1 footcandle of lighting on the floor surface.

23. All lighting fixtures shall be vandal and graffiti resistant. All ground-floor exteriors and common areas, including hallways, elevators and shower facilities should be made graffiti resistant through the use of special paint, texturing, carpeting or other means as approved by the Police Department.

24. A Management Plan shall be submitted for review and approval, or approval with modifications as part of the Conditional Use Permit. This Plan shall be comprehensive and shall contain provisions as recommended by the Director of the Department of Planning and Building Services and as adopted by the Planning Commission. The failure of the property owner to comply with the Management Plan may be grounds for revocation of the Conditional Use Permit pursuant to San Bernardino Municipal Code Chapter 19.36.

25. Security provisions shall be provided in the following manner:

    a. Video cameras equipped with infrared detectors must be strategically placed in all public areas including hallways, elevator entrances, lobby areas, garage areas, laundry areas, profit centers and other common areas, and monitored for internal security. The monitoring station may be at the front desk. In order to provide for adequate monitoring, the location and configuration of monitors is subject to review by the Police Department. NOTE: Infrared detectors are to activate a flashing light to help direct monitoring staff to a specific monitor and area of the facility.

    b. Unit doors shall be equipped with interior locks and key card entrance systems which shall be reprogrammable.

    c. Common shower area doors accessible through hallways shall be equipped with interior locks with access by a management master key. An emergency call button or pull cord shall be provided.

    d. Front entry areas shall allow for adequate visual access into the front desk/lobby area by police from patrol cars.

    e. Each room and all common areas shall have operable windows, except for the first floor which may be fixed, if a reasonable equivalent alternative is approved by the Chief Building Official and Fire Chief.

    f. Adequate measures shall be taken to provide for vehicle parking security including limited secured access by electronic wrought iron security gates and fencing or alternative materials compatible with the architectural style, night lighting and video camera monitoring. Override devices for gates shall be provided for the Police and Fire Department.

    g. Pursuant to 19.06.030(2)(S)(26) or (27), if "failure by management" has occurred or violations of conditions of approval are found, then a private security guard may be required to be provided on a 24 hours a day basis. The security guard shall be fully uniformed, bonded, P.O.S.T. certified and licensed by the State to bear firearms.

h. Valid photo identification shall be required as a condition of registration. A valid photo identification is a state or official driver's license, a military identification card, an official state identification card or a San Bernardino Police Department registration card. Management shall post in the registration area signs declaring that photo identification is required for tenants and a valid identification for their guests (photo identification is not required, unless the guest is staying overnight), and that the registration information will be presented to the Police Department upon demand.

i. Management is to keep and maintain complete and accurate tenant registration cards in duplicate, including photocopies of required photo identification. Registration information shall include the name of the occupant, unit number, rental rate, vehicle type and vehicle license number. The duplicate copies of the registration cards shall be taken to the San Bernardino Police Department weekly. Registration information shall be provided to the Police Department upon demand.

26. A condition of approval of a SRO facility shall be in compliance with Municipal Code Chapter 5.82 (Business Permit Regulation's). A SRO facility with excessive drug or prostitution arrests may be brought before the Police Commission for review, with notice of that review meeting being sent to the SRO facility owner. If the Police Commission determines that a "failure by management" has occurred, in that a finding is made that excessive drug or prostitution arrests are occurring at the SRO facility, the Operators Permit issued to the SRO facility may be revoked pursuant to Municipal Code Chapter 5.82. Further operation of the SRO facility shall not occur without first processing and obtaining approval for a new Operators Permit.

27. Condition compliance inspections by the City may be made on an annual basis, and the costs of such inspections, up to $5,000.00 adjusted annually for inflation, shall be paid by the SRO facility operator. Any violation(s) of the conditions of approval, municipal codes, or state or federal laws or regulations pertaining to SRO facilities, as they exist at the time of the inspection, shall be corrected within the time period(s) specified in the notice of violation. If the Director makes a finding that the corrections have not been made within the specified time period(s), the Conditional Use Permit and Operators Permit for the SRO facility may be revoked pursuant to the provisions in Chapter 19.36 and 5.82 of the Municipal Code.

28. The maximum number of SRO units to be brought into service within the City of San Bernardino after the effective date of the Development Code, shall be the number that accommodates 500 occupants. Prior to any proposed amendments to these SRO standards or to an increase in the maximum number of SRO units in service, the Department of Planning and Building Services shall present a report to the City Council with the following information: the number and location of permitted SRO projects, the number and capacity of existing SRO units, the average occupancy rate, the rent levels, the average number of vehicles per resident, and the perceived adequacies or deficiencies of the management services provided in the SRO facilities.

29. Existing motels, hotels or apartments shall not be permitted to convert to SROs. MC 878 6/7/93

Y. SOCIAL SERVICE USES/CENTERS

Refer to Section 19.04.030(2)(T). MC 1106 11/1/01

Z. HOTELS, MOTELS, B&BS, AND EXTENDED LODGING FACILITIES MC 1126 7/4/02, MC 1381 12/19/12

1. Hotels, Motels and Bed & Breakfast Inns (B&Bs) are allowed in the CG-1, CG-2, CR-2, CR-3, and CCS-1 zones. Extended Lodging Facilities are allowed in the CR-2 and CR-3 zones.

2. All Hotels, Motels, Bed & Breakfast Inns (B&Bs), and Extended Lodging Facilities are subject to a Conditional Use Permit and shall comply with the following standards in addition to any conditions imposed by the Planning Commission.

   a. Hotels and Extended Lodging Facilities shall provide guestrooms with voicemail, dataports, desk, laundry facilities, color television, alarm clock or wake up service. Hotels and Extended Lodging Facilities shall also make irons and ironing boards available to guests upon request. Motels shall provide guestrooms with voicemail, desk, color television, and alarm clock or wake up service.

   b. The minimum lot size for a Hotel or Extended Lodging Facilities shall be one (1) acre, with a minimum of 100 rooms. The minimum room size for Hotels and Extended Lodging Facilities shall be 300 square feet. There shall be a minimum of 25 square feet per guestroom of meeting space for full service Hotels.

   c. Hotels and Extended Lodging Facilities shall include at least one recreational facility, such as a pool, whirlpool/spa, or fitness room. Motels shall provide a pool.

   d. A restaurant shall be provided for full service Hotels and a guest courtesy lounge (for snacks including vending machines) shall be provided for limited service Hotels and Extended Lodging Facilities.

   e. Extended Lodging Facilities shall provide a 24-hour per day on-site supervisor, as designated by the owner/operator.

   f. Hotels and Extended Lodging Facilities shall provide interior access to rooms. Motels can have access from walkways or the parking lot.

3. An application for a Conditional Use Permit for a Hotel, Motel, or Extended Lodging Facility shall be accompanied by a report with the following information.

a. Number of Hotel, Motel, and Extended Lodging Facility rooms available in the City;

b. Current rates structure of existing facilities in the City and/or the adjacent areas;

c. Proposed rate structure, including term (daily, weekly, etc.).

4. Kitchens, kitchenettes and other cooking facilities shall not be permitted with Hotel or Motel units except the manager's unit. Kitchens, kitchenettes or other cooking facilities may be permitted within Extended Lodging Facilities.

5. Housekeeping services including cleaning and linen service shall be made available daily to each guestroom, at the option of the guest.

6. Leases and rental agreements of any duration are prohibited.

7. Hotels, Motels, and Extended Lodging Facilities cannot be used for a mailing address, voter registration, school registration, or listed for a personal phone number.

8. No existing Hotels or Motels can be converted to an Extended Lodging Facility.

9. Hotels, Motels, and Extended Lodging Facilities cannot be used for long-term occupancy for uses and facilities such as apartments, care facilities, boarding houses, and other similar uses and facilities, etc.

10. Hotels may have a maximum continuous length of stay of fourteen (14) days with a five-day interruption required before commencement of each such subsequent stay.

11. Motels may have a maximum continuous length of stay of fourteen (14) days with a five-day interruption required before commencement of each such subsequent stay.

12. Extended Lodging Facilities may have a maximum continuous length of stays as follows:

a. One hundred (100) % of the total guest rooms in the facility may be occupied by guests having a maximum length of stay of up to 30 days with a five-day interruption required before commencement of each such subsequent stay.

b. Fifteen (15) % of the total guest rooms in the facility may be occupied by guests having a maximum continuous length of stay of up to 90 days with a five-day interruption required before commencement of each such subsequent stay.

c. Five (5) % of the total guest rooms in the facility may be occupied by guests having a maximum continuous length of stay of up to 180 days with a five-day interruption required before commencement of each such subsequent stay.

d. Four (4) % of the total guest rooms in the facility may be occupied by guests having a maximum continuous length of stay of up to 270 days with a five-day interruption required before commencement of each such subsequent stay.

e. Two (2) % of the total guestrooms in the facility will be unlimited as to length of stay.

13. No Hotel, Motel, or Extended Lodging Facility shall solicit or accept advance payment for more than seven (7) days lodging.

14. Compliance with the foregoing limitations will be determined on a year-to-year basis, based on average guest length of stay throughout each twelve (12) month period of operation on the applicable Extended Lodging Facility.

15. Operators of Hotels, Motels, and Extended Lodging Facilities shall provide the City with rental receipts, and related, pertinent information, within 3 days after request by any City official.

16. All of the provisions of this section of the Development Code Amendment, and applicable conditions of approval, shall be written in to the deed and recorded, prior to the issuance of a grading permit.

19.06.040 APPLICABLE REGULATIONS

All uses shall be subject to the applicable regulations of this Development Code, including, but not limited to Article IV, Administration provisions.