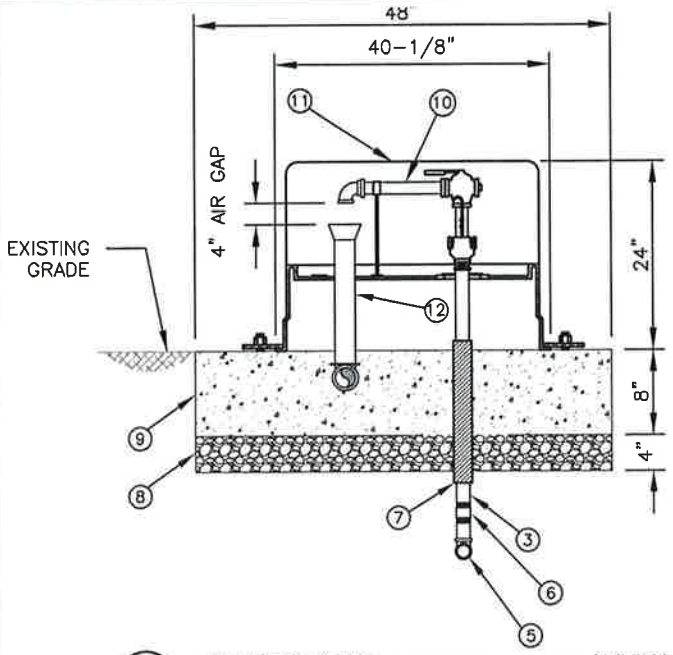

A/2 2" AUTOMATIC BLOW-OFF FRONT VIEW
NOT TO SCALE

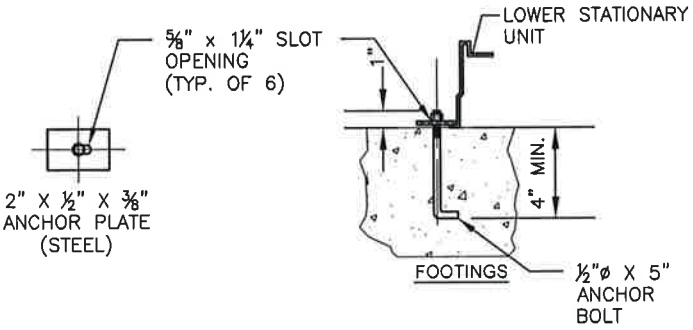

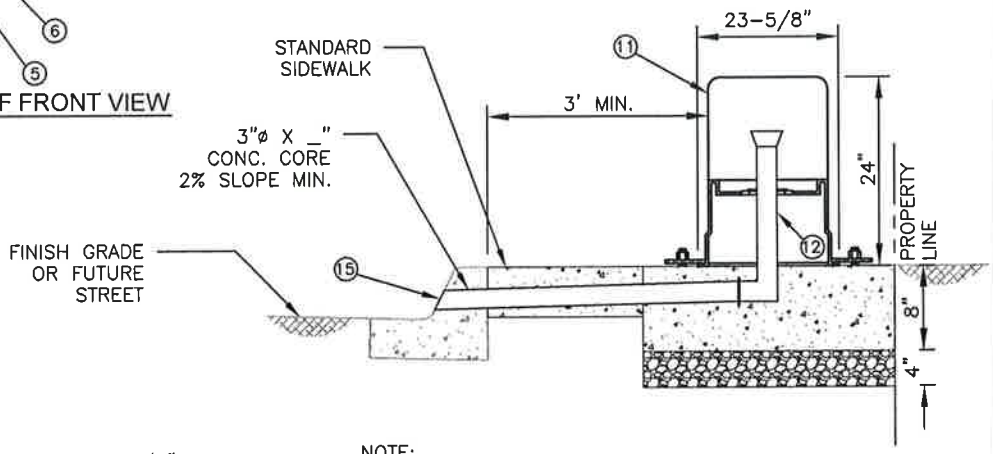

NOTE:
STANDARD SIDEWALK – SAWCUT AND REPLACE PER CITY STANDARDS (ADD COLD JOINTS WHERE NECESSARY)

3" SCH. 80 PVC DRAIN PIPE
NOT TO SCALE
B/2

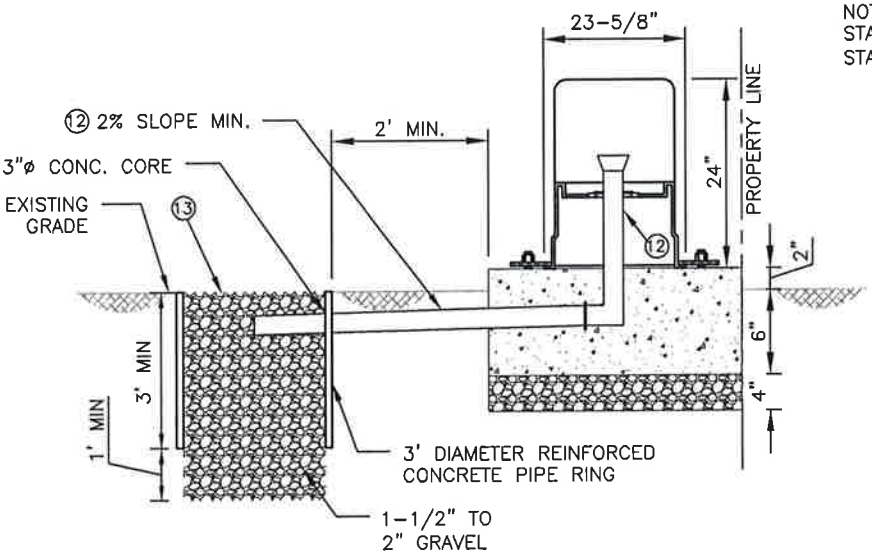

UNIMPROVED LOCATION 3" SCH. 80 PVC DRAIN PIPE
NOT TO SCALE

NOTES:

1. SEE W6.8 1 OF 2 FOR CONSTRUCTION NOTES.

REVISION DATE: 5/12/2014

F.D.L.	MAY 14	SAN BERNARDINO MUNICIPAL WATER DEPARTMENT	DRAWING NUMBER
F.D.L.	JUN 13	2" AUTOMATIC BLOWOFF DETAIL	SBMWD
G.S.B.	JAN 11		
D.D.M.	MAY 10		W6.8 2 OF 2
REVISION	DATE	APPROVED MATTHEW H. LITCHFIELD, P.E. RCE 58079 DATE 7/29/14	
SCALE: NONE			