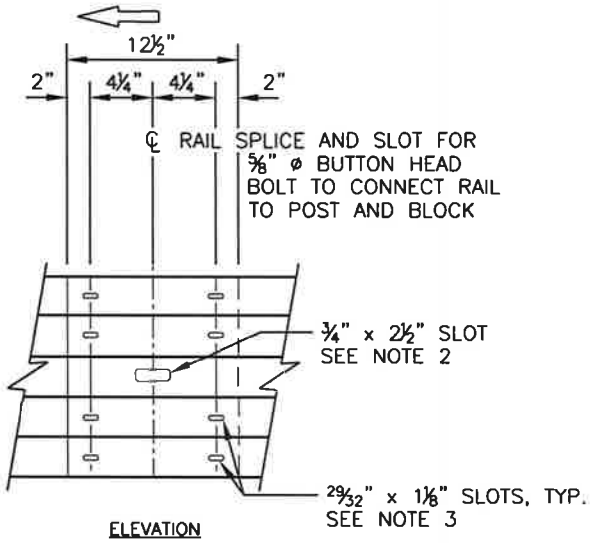

RAIL ELEMENT SPLICE DETAIL

A. CONNECT THE OVER LAPPED END OF THE RAIL ELEMENTS WITH ⅝" ø x 1⅜" BUTTON HEAD OVAL SHOULDER SPLICE BOLTS INSERTED INTO THE 29/32" x 1⅛" SLOTS AND BOLTED TOGETHER WITH ⅝" ø RECESSED HEX NUTS. RECESS OF HEX NUT POINTS TOWARD RAIL ELEMENT. A TOTAL OF 8 BOLTS AND NUTS ARE TO BE USED AT EACH RAIL SPLICE CONNECTION.

B. THE ENDS OF THE RAIL ELEMENTS ARE TO BE OVERLAPPED IN THE DIRECTION OF TRAFFIC (SEE DETAILS).

C. WHERE END CAP IS TO BE ATTACHED TO THE END OF A RAIL ELEMENT, A TOTAL OF 4 OF THE ABOVE DESCRIBED SPLICE BOLTS AND NUTS ARE TO BE USED.

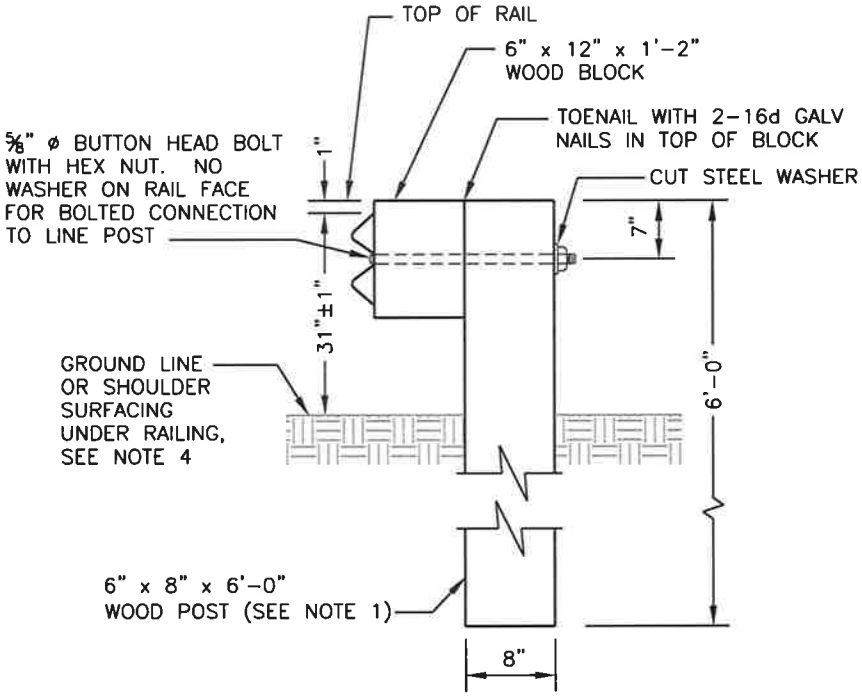

SECTION A-A
(SEE W6.16A PLAN)

TYPICAL WOOD LINE POST INSTALLATION

NOTES:

1. FOR DETAILS OF WOOD POSTS AND WOOD BLOCKS USED TO CONSTRUCT GUARDRAIL, SEE SBMWD STD. DWG. 6.16C.
2. SLOTTED HOLE FOR BOLTED CONNECTION OF RAIL ELEMENT TO BLOCK AND POST. SEE "SECTION THRU RAIL ELEMENT".
3. SLOTTED HOLES FOR SPLICE BOLTS TO OVERLAP ENDS OF RAIL ELEMENT. SEE "SECTION THRU RAIL ELEMENT".
4. INSTALL POSTS IN SOIL.

REVISION DATE: 3/03/2015

D.D.M.	MAR. 15
REVISION	DATE
SCALE: NONE	

GUARDRAIL SYSTEM STANDARD RAILING SECTION (WOOD POST WITH WOOD BLOCK)

APPROVED _____ DATE 3/17/15

MATTHEW H. LITCHFIELD, P.E. RCE 58079

DRAWING NUMBER

SBMWD

W6.16B