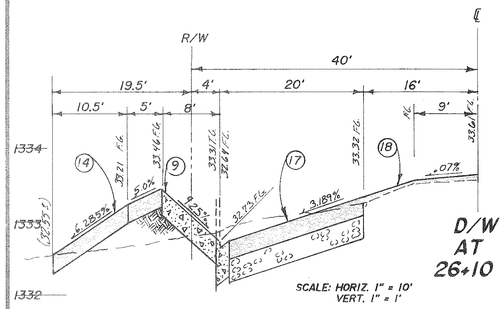

D/W AT 26+10

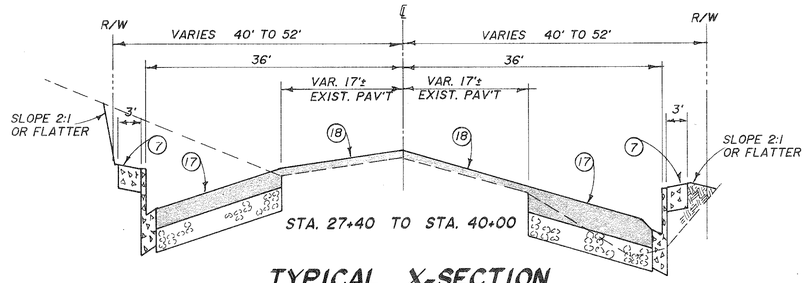

TYPICAL X-SECTION

SCALE: HORIZ. 1" = 10'
VERT. 1" = 1'

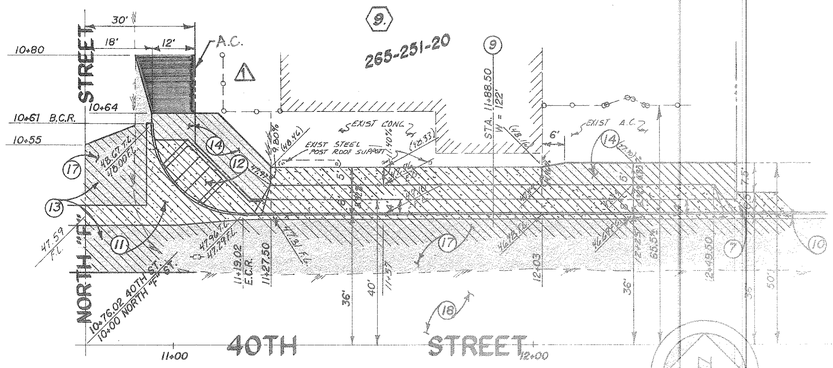

SCALE: 1" = 20'

DETAIL "A"

A.P.N. 265-251-20

FROM PAGE 3 OF 8

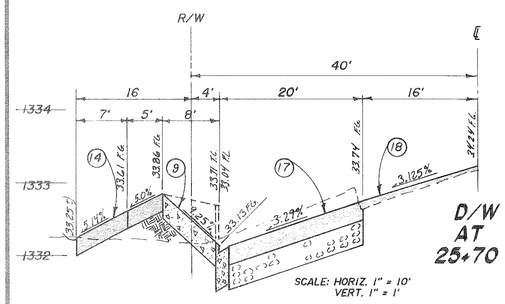

D/W AT 25+70

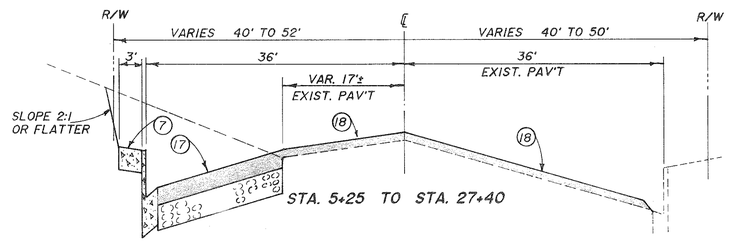

TYPICAL X-SECTION

SCALE: HORIZ. 1" = 10'
VERT. 1" = 1'

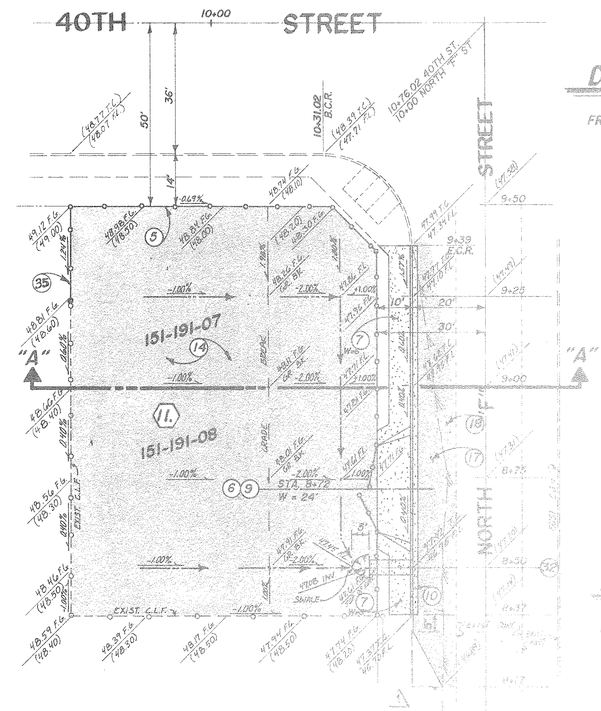

DETAIL "B"

A.P.N. 151-191-08

FROM PAGE 3 OF 8

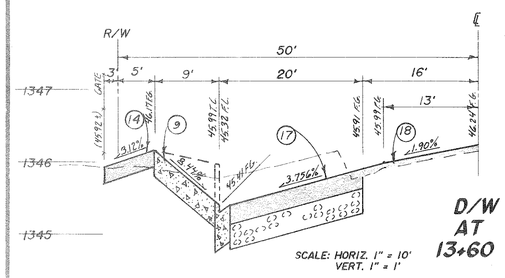

D/W AT 13+60

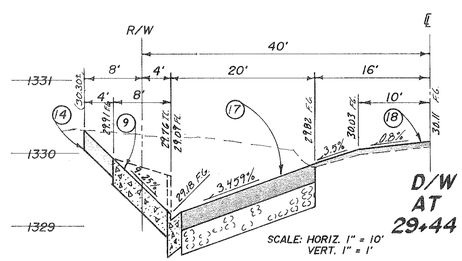

D/W AT 29+44

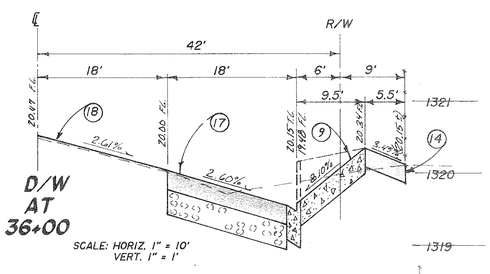

D/W AT 36+00

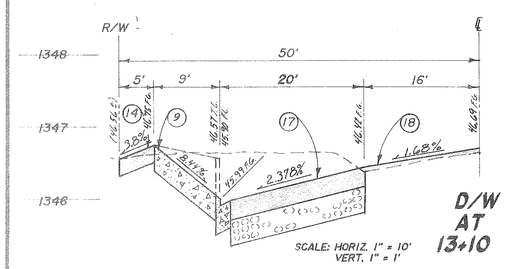

D/W AT 13+10

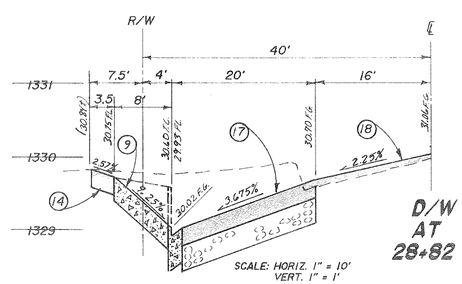

D/W AT 28+82

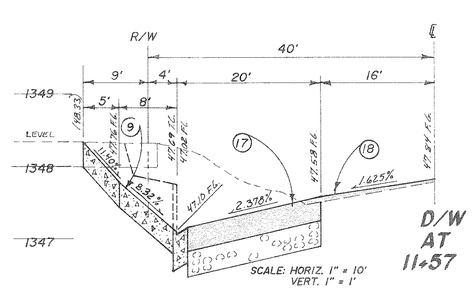

D/W AT 11+57

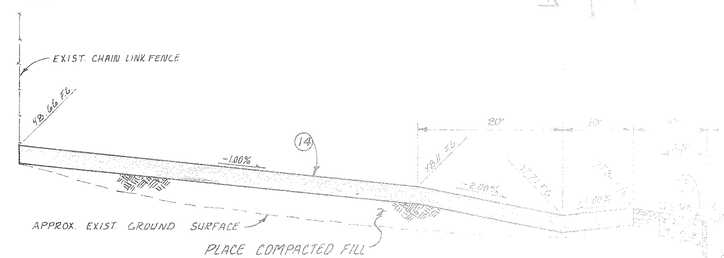

SECTION "A" - "A"

AT STA. 9+00 ON NORTH "F" STREET

SCALE: HORIZ. 1" = 10'
VERT. 1" = 1'

SEE ABOVE DETAIL "B"

AS RECORD
NO NOTED DEVIATIONS FROM PLANS
APPROVED DATE

APPROVED _____ 19 97
DIRECTOR OF PUBLIC WORKS/CITY ENGINEER
REGISTERED CIVIL ENGINEER NO. 23015

CITY OF SAN DIEGO
DEPARTMENT OF PUBLIC WORKS

MARK	REVISIONS	BY	APPR.	DATE
A	PER AS BUILT	R.S.		

DRAWN BY R. Juarez & R. Sepulveda
CHECKED BY
RECOMMENDED BY

FORTUNA