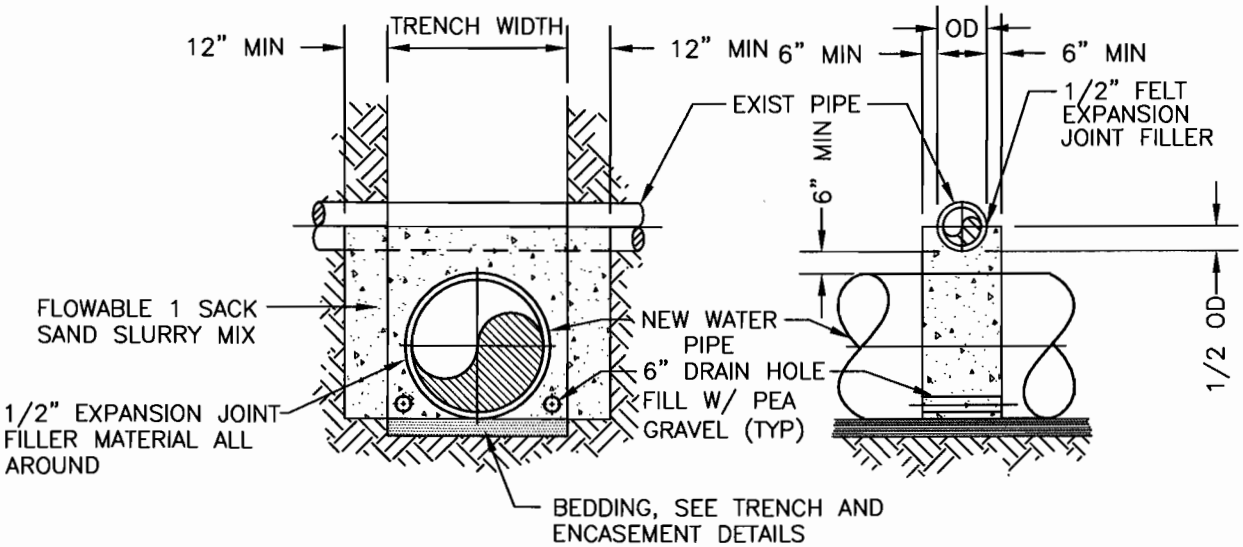

EXISTING PIPE OVER NEW WATER MAIN

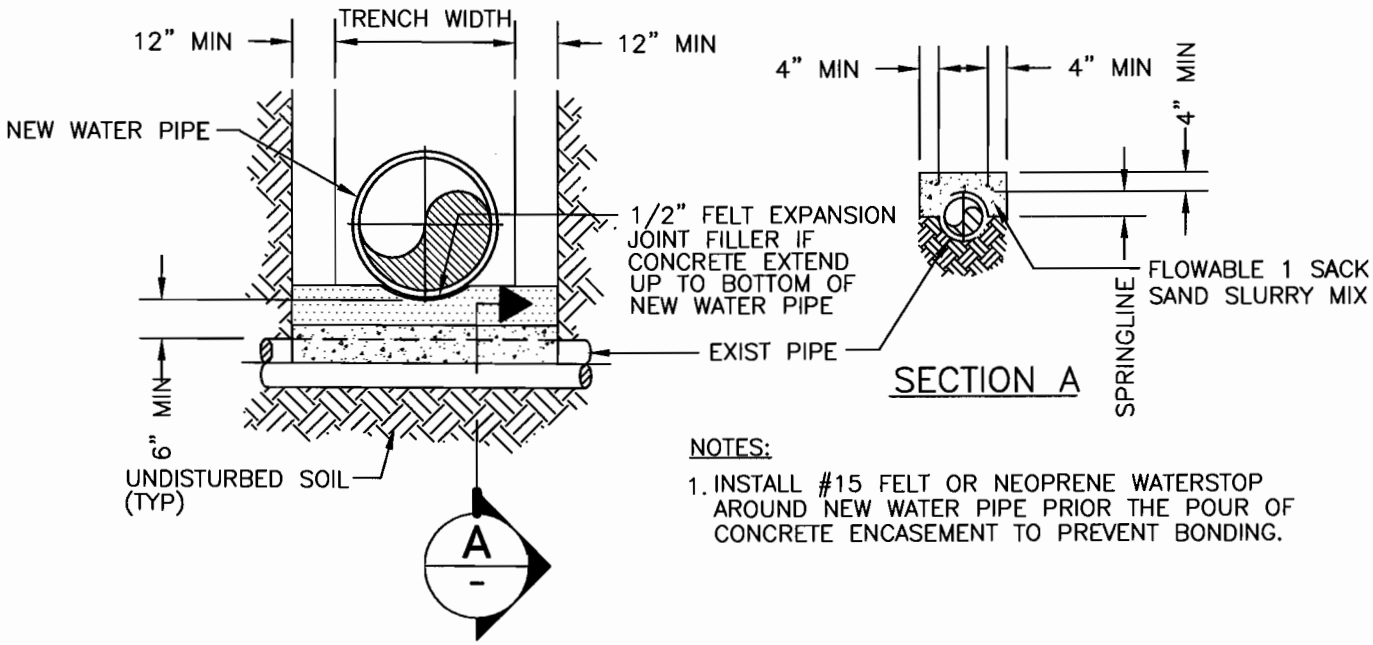

NOTES:

1. INSTALL #15 FELT OR NEOPRENE WATERSTOP AROUND NEW WATER PIPE PRIOR THE POUR OF CONCRETE ENCASEMENT TO PREVENT BONDING.

EXISTING PIPE UNDER NEW WATER MAIN

REVISION DATE: 01/10/2011

		SAN BERNARDINO MUNICIPAL WATER DEPARTMENT	DRAWING NUMBER
R.L.L.	JAN. 11	STRUCTURAL SUPPORT AT CROSSING	SBMWD
M.H.L.	FEB. 08		
M.H.L.	FEB. 04		W5.2
REVISION	DATE	APPROVED ____ MATTHEW H. LITCHFIELD, P.E. RCE 58079 DATE 10/11/4	
SCALE:	NONE		