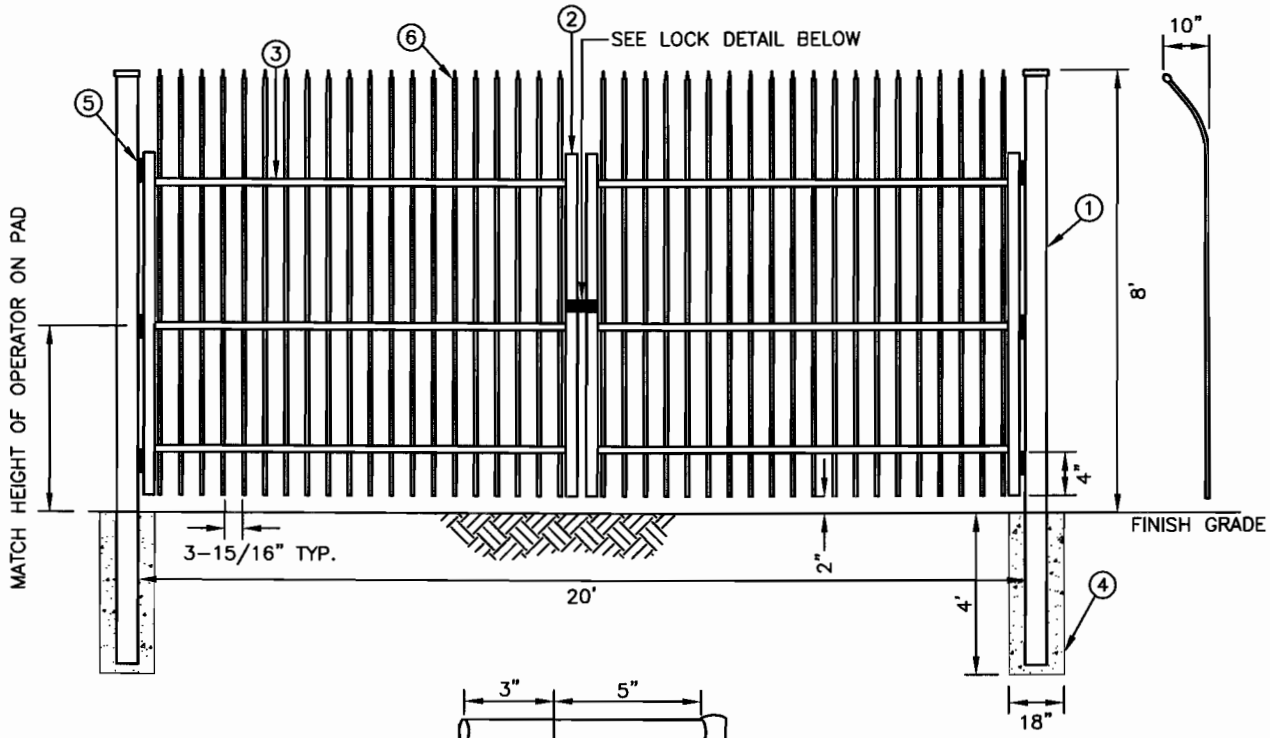

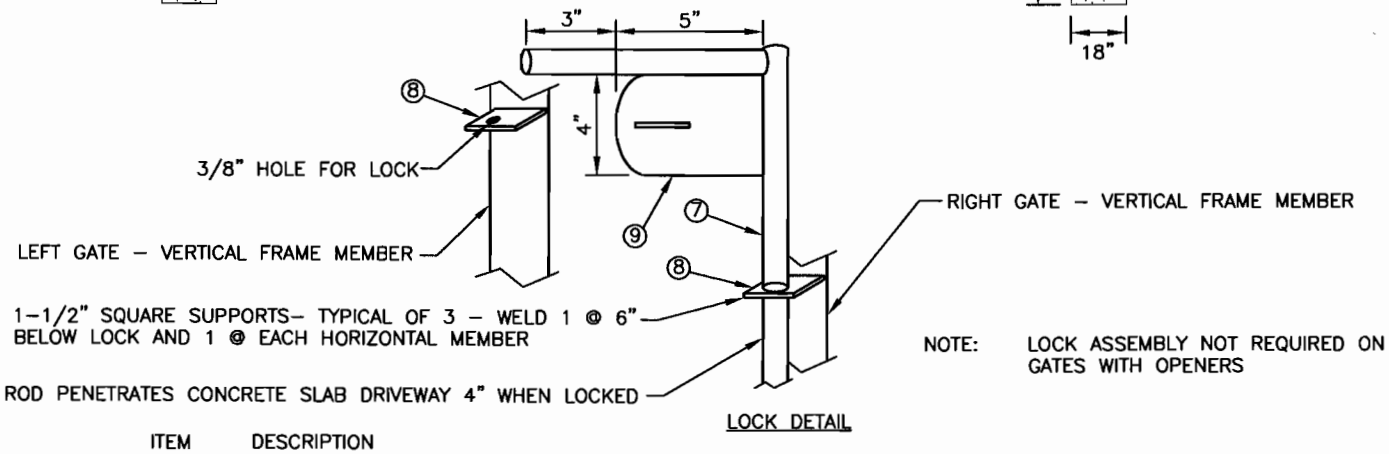

NOTE: LOCK ASSEMBLY NOT REQUIRED ON GATES WITH OPENERS

LOCK DETAIL

ITEM	DESCRIPTION
1	DRIVE GATE POST – 4" SQUARE TUBING (.250" WALL THICKNESS)
2	VERTICAL FRAME MEMBER 1-1/2" SQUARE TUBE (.125" WALL THICKNESS)
3	HORIZONTAL RAIL 1-1/2" SQUARE TUBING (.125" WALL THICKNESS)
4	5 SACK CONCRETE (3/4" ROCK)
5	6" BARREL HINGE W/ GREASE ZIRK – 3 PER GATE (1@ EACH HORIZONTAL MEMBER)
6	VERTICAL MEMBERS – 1"Ø (.090" WALL THICKNESS) w/ SPEAR HEAD
7	3/4" SOLID ROUND STOCK
8	1/4" x 1-1/2" FLAT STEEL PLATE (CUT TO 1-1/2" x 1-1/2")
9	1/4" STEEL PLATE
10	COATING – ALL METAL SURFACES SHALL BE COATED WITH # 379 EPOXY, COLOR 172 ADOBE OR APPROVED EQUAL

REVISION DATE: 3/9/2011

D.D.M.	MAR. 11	SAN BERNARDINO MUNICIPAL WATER DEPARTMENT	DRAWING NUMBER
D.D.M.	AUG. 09		
W.B.H.	APRIL 08	**WROUGHT IRON DRIVE SWING GATE DETAIL**	SBMWD
M.H.L.	FEB. 04		
REVISION	DATE	APPROVED DATE 10/11/11	W6.12B
SCALE: NONE		MATTHEW H. LITCHFIELD, P.E. RCE 58079	