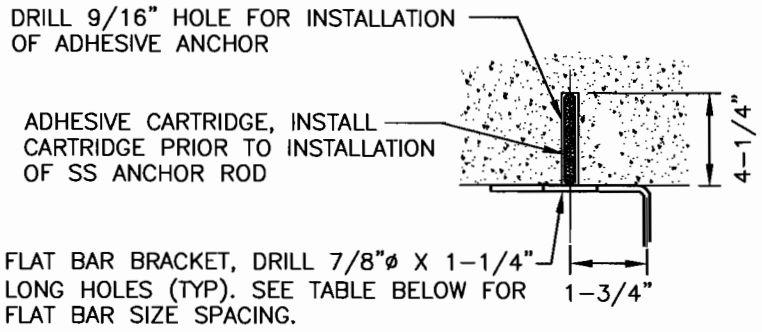

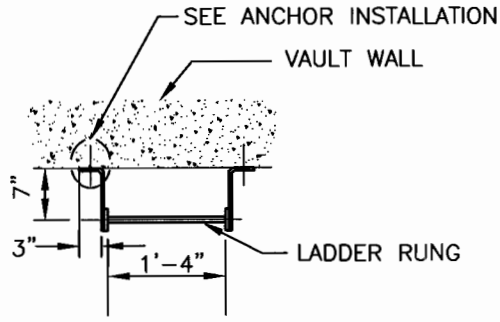

LADDER IN VAULT

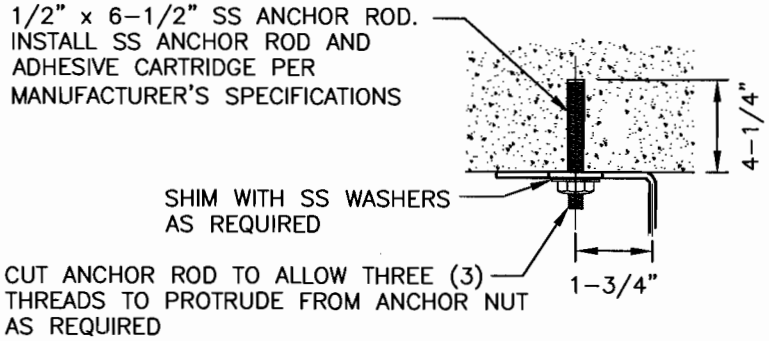

ANCHOR INSTALLATION

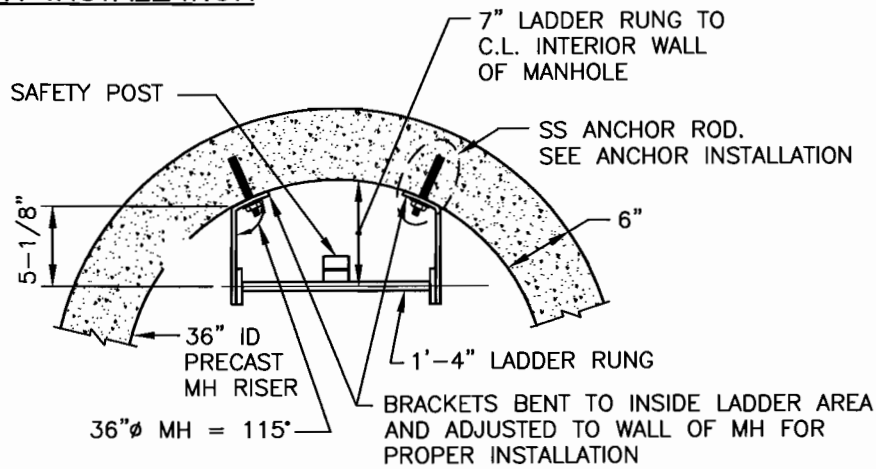

LADDER IN MANHOLE

BRACKET SPACING TABLE	
BRACKET SPACING	FLAT BAR SIZE
5'-0" TO 20'-0" OC MAX	3" x 3/8"
OVER 20'-0"	4" x 1/2"

NOTES:

1. LANDING PLATFORM REQUIRED EVERY 20'-0" OF HEIGHT OR FRACTION THEREOF FOR OPEN LADDER. FOR LADDER WITH CAGE, PLATFORM SPACING IS 30'-0" MAX (OSHA 1910.27).
2. APPROVAL OF THE ENGINEER REQUIRED FOR ANY BRACKET SPACING OVER 5'-0" OC (SEE BRACKET SPACING TABLE FOR BAR SIZE).
3. LADDER SHALL BE MADE OF REINFORCED FIBERGLASS.

REVISION DATE: 3/18/2011

		SAN BERNARDINO MUNICIPAL WATER DEPARTMENT	DRAWING NUMBER
D.D.M.	MAR. 11	LADDER INSTALLATION DETAILS	SBMWD
M.H.L.	FEB. 05		W6.22
REVISION	DATE	APPROVED MATTHEW H. LITCHFIELD, P.E. RCE 58079 DATE 10/11/11	
SCALE: NONE			