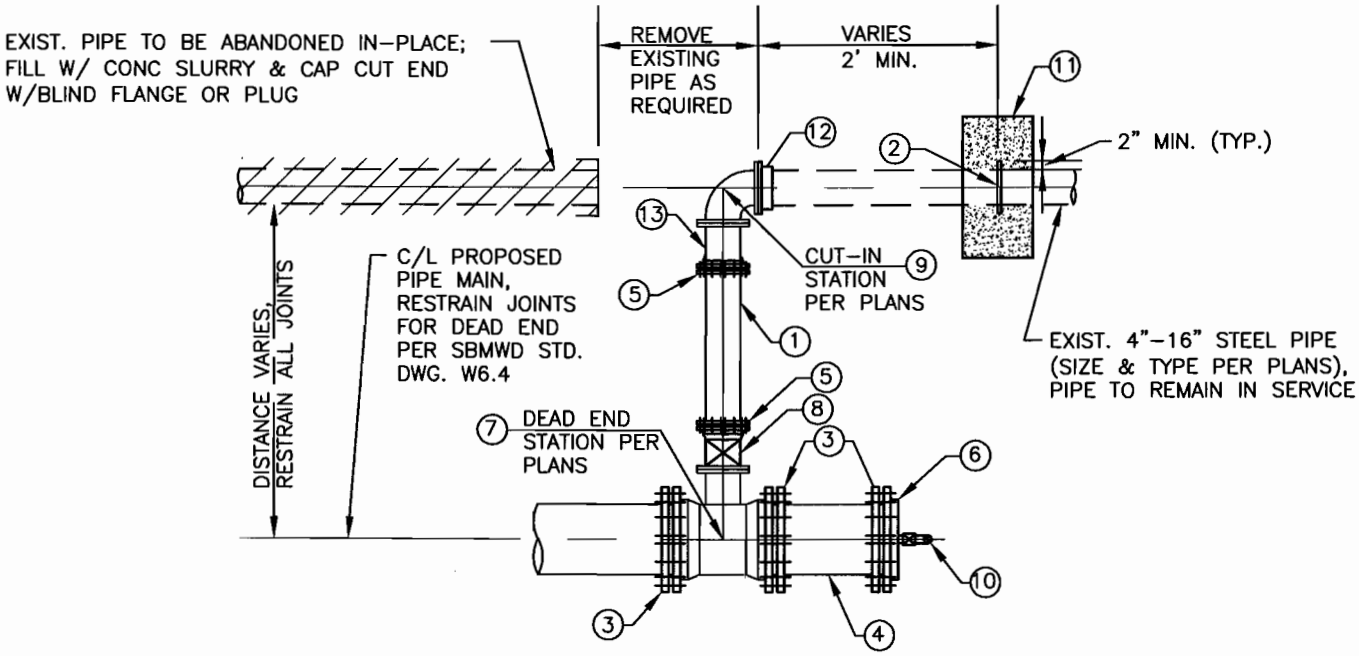

ITEM	QUANTITY	DESCRIPTION
1		AS REQ'D EXIST PIPE SIZE X REQUIRED LENGTH CLASS 50 DIP P.E. SPOOL
2	1 EA	EXIST. PIPE SIZE X 1" SPLIT STEEL PLATE, WELD TO PIPE ALL AROUND
3	3 EA	PROPOSED PIPE MAIN SIZE M.J. DUCTILE IRON RETAINER GLAND, EBBA IRON MEGALUG OR APPROVED EQUAL
4		AS REQ'D PROPOSED PIPE MAIN SIZE X REQUIRED LENGTH CLASS 50 DIP P.E. SPOOL
5	3 EA	EXIST. PIPE SIZE EBBA IRON MEGALUG OR APPROVED EQUAL
6	1 EA	PROPOSED PIPE MAIN SIZE M.J. END CAP WITH 2" TAP
7	1 EA	PROP. PIPE MAIN RUN SIZE X EXIST PIPE SIZE SIDE OUTLET (M.J. X M.J. X FLG UNLESS OTHERWISE SHOWN ON PLAN)
8	1 EA	EXIST. PIPE SIZE FLG X M.J. GATE VALVE PER SBMWD STD. DWG. 3.1
9	1 EA	EXIST. PIPE SIZE X 90° FLG BEND
10	1 EA	2" CHLORINATION AND FLUSHING PORT W/O SERVICE SADDLE PER SBMWD STD. DWG. W6.07
11	1 EA	IN-LINE THRUST BLOCK PER SBMWD STD. DWG. W6.11
12	1 EA	EXIST. PIPE SIZE CL 150 AWWA SLIP ON FLG OR APPROVED FLG COUPLING ADAPTOR W/ANCHOR STUDS, AT CONTRACTORS OPTION W/ INSULATOR, INC INSULATING KIT
13	1 EA	EXIST. PIPE SIZE FLG X MJ ADAPTOR

NOTE: ALL MATERIAL, CONSTRUCTION METHODS AND TESTING SHALL BE IN ACCORDANCE WITH SBMWD STANDARDS AND SPECIFICATIONS. A SBMWD INSPECTOR SHALL BE PRESENT AT ALL TIMES DURING CONSTRUCTION UNLESS OTHERWISE APPROVED BY SBMWD.

REVISION DATE: 3/21/2011

		SAN BERNARDINO MUNICIPAL WATER DEPARTMENT	DRAWING NUMBER
		DETAIL FOR 4"-16" STEEL PIPE, CUT AND PLUG EXISTING WATER MAIN	SBMWD
D.D.M.	MAR. 11		W6.24
REVISION	DATE	APPROVED MATTHEW H. LITCHFIELD, P.E. RCE 58079 DATE 20/11/11	
SCALE: NONE			