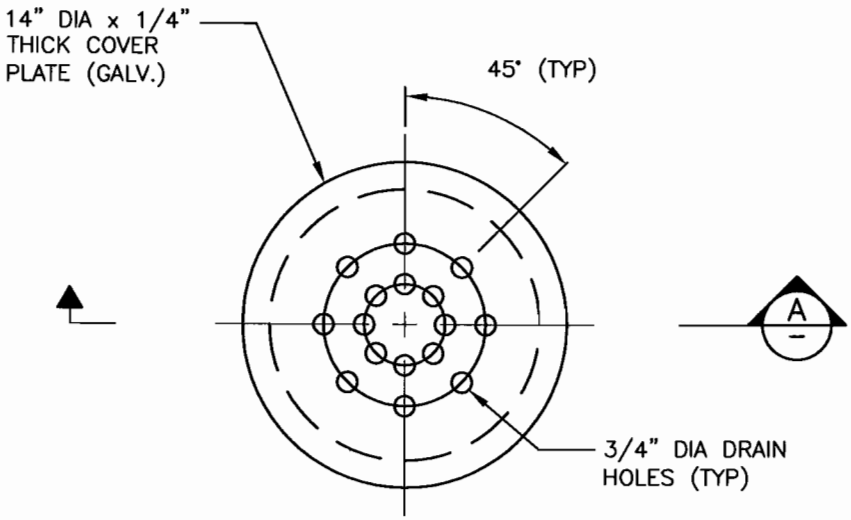

PLAN

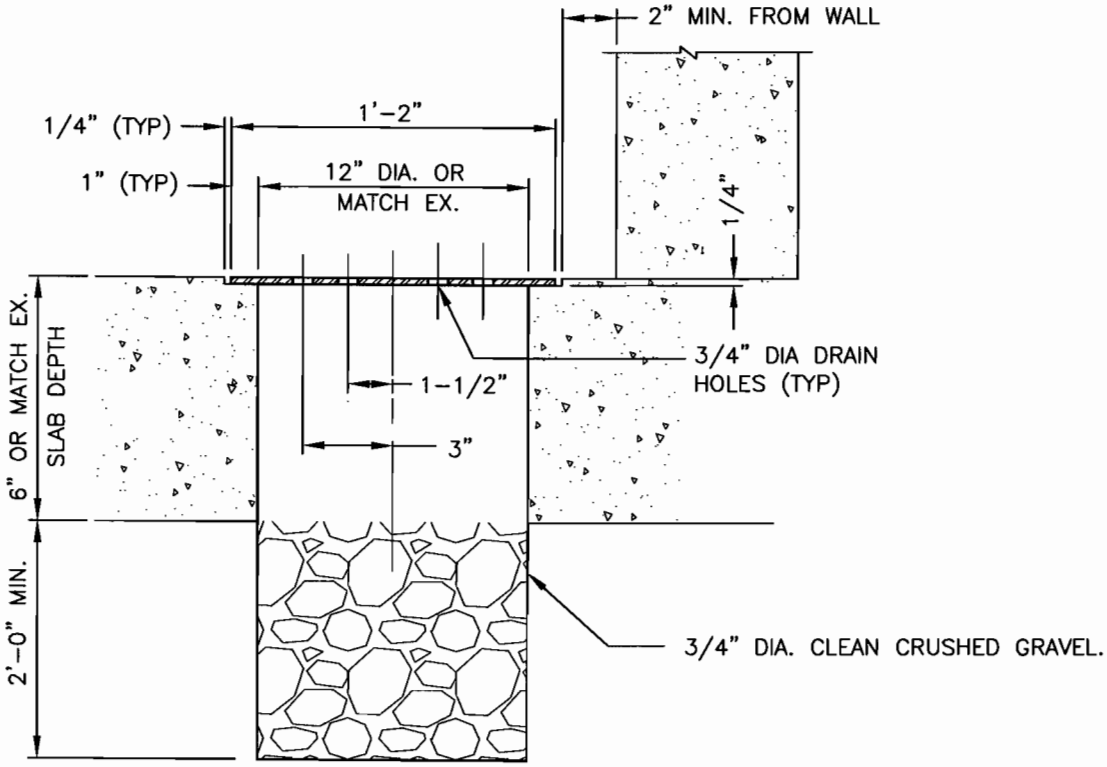

SECTION A

REVISION DATE: 3/30/2011

		SAN BERNARDINO MUNICIPAL WATER DEPARTMENT	DRAWING NUMBER
D.D.M.	MAR. 11	**SUMP GRATE DETAILS**	SBMWD
M.H.L.	MAY 05		W6.30
REVISION	DATE	APPROVED _____ DATE 10/11/11	
SCALE: NONE		MATTHEW H. LITCHFIELD, P.E. RCE 58079	