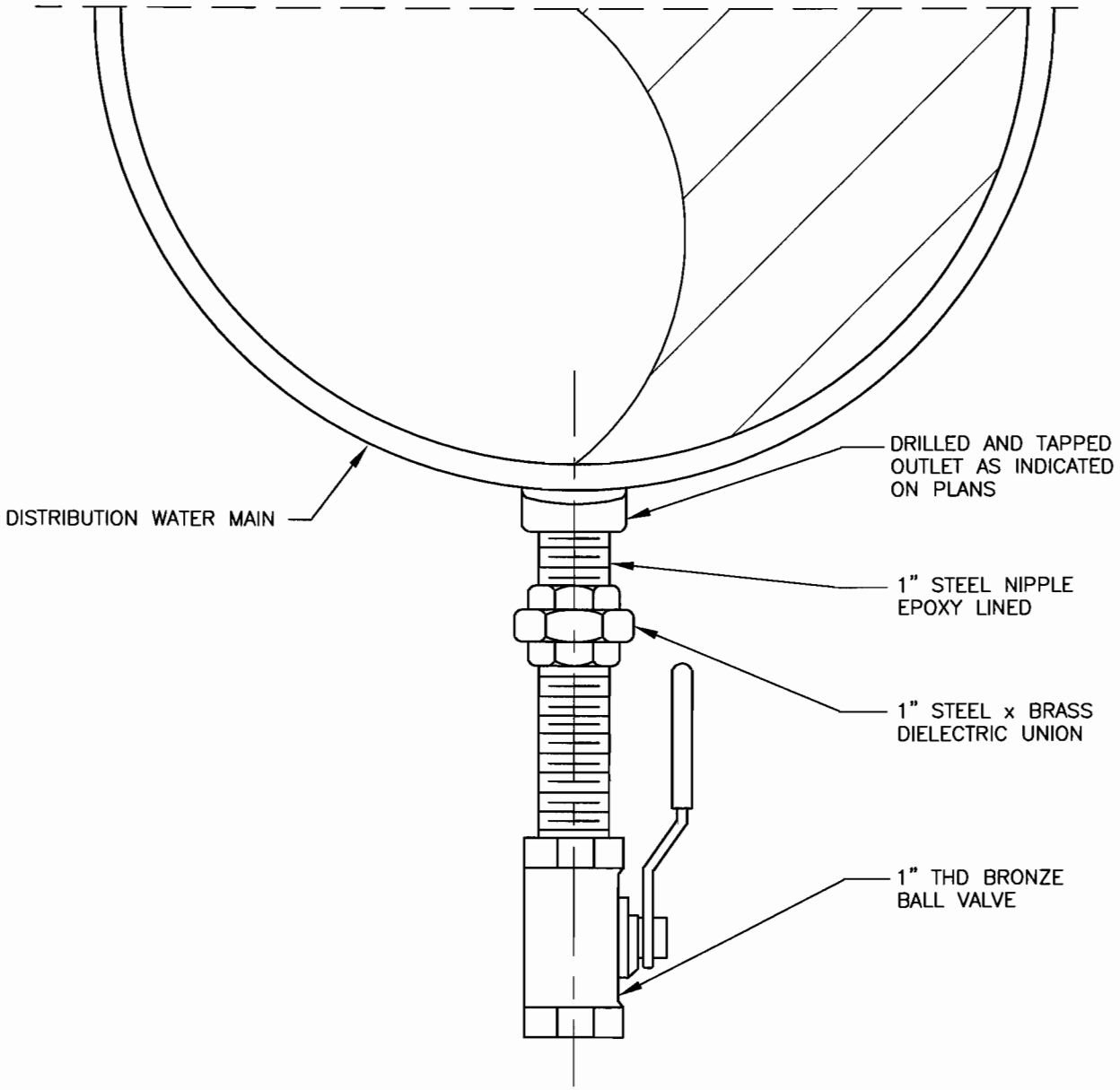

SECTION

REVISION DATE: 3/30/2011

		SAN BERNARDINO MUNICIPAL WATER DEPARTMENT	DRAWING NUMBER
D.D.M.	MAR. 11	**DRAIN CONNECTION DETAIL**	SBMWD
M.H.L.	FEB. 05		W6.31
REVISION	DATE	APPROVED MATTHEW H. LITCHFIELD, P.E. RCE 58079 DATE 10/11/11	
SCALE: NONE			