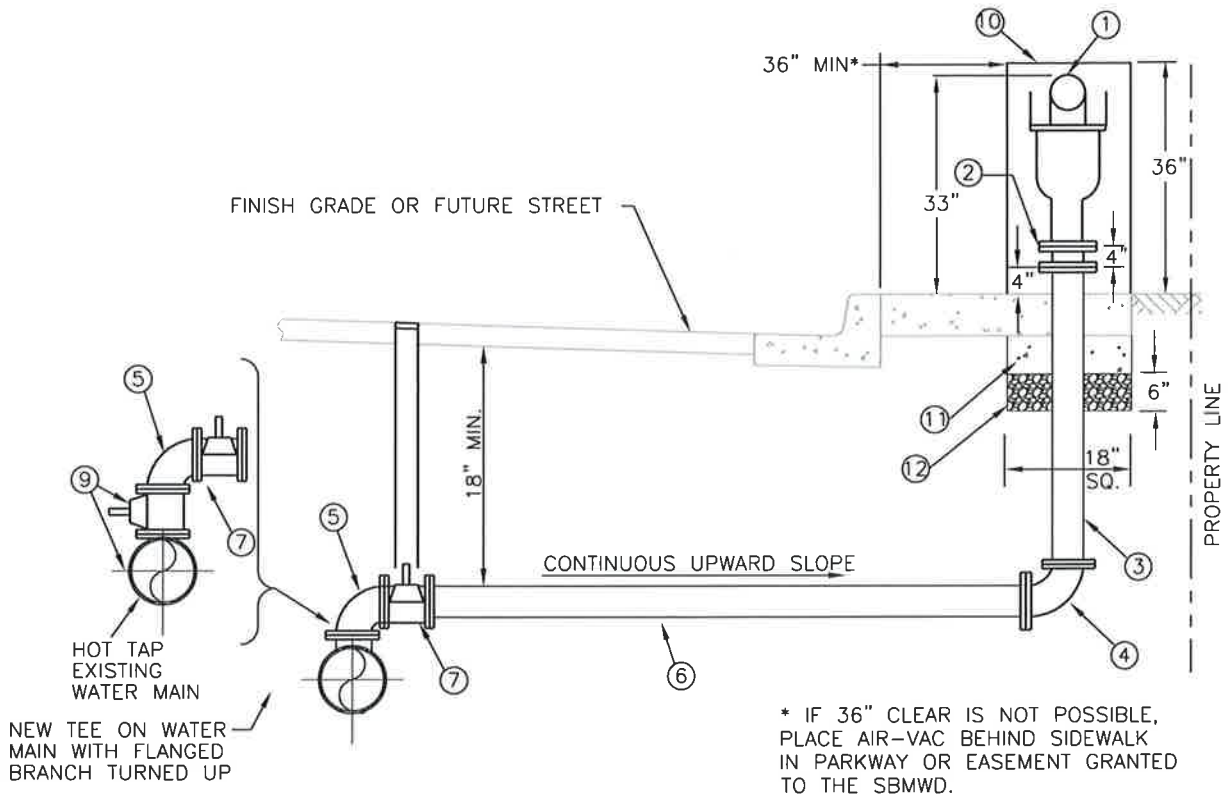

NOTE: PROVIDE ADEQUATE DRAINAGE FOR AIR VAC. IF ADEQUATE SURFACE DRAINAGE IS NOT PRACTICAL, USE A 2 CUBIC FOOT GRAVEL FILLED SEEPAGE PIT TO AVOID POSSIBLE DAMAGE CAUSED BY SURFACE WATER RUN OFF.

ITEM	QTY	DESCRIPTION
1	1 EA.	__" AIR VACUUM VALVE [COMBINATION HIGH PRESSURE AIR RELEASE AND VACUUM VALVE] DIRECT BLOW OFF TOWARD THE CURB USING GALVANIZED PIPING [CRISPIN, APCO, OR APPROVED EQUAL]
2	1 EA	__" FLANGED BREAKAWAY EXTENSION SPOOL. MORTAR LINED AND PAINTED TO MATCH AIR-VAC (INCLUDE HOLLOW BREAKAWAY BOLTS). FOR 3" AIR-VAC USE A 3" x 4" ADAPTOR SPOOL
3	___ LF	___" SCH. 40 STEEL PIPE RISER. FOR 3" AIR VAC USE 4" PIPE
4	___ LF	___" 90° DUCTILE IRON BEND (MJxFLG)
5	1 EA	___" 90° DUCTILE IRON BEND (FLG)
6	___ LF	___" PRESSURE CLASS 350 DUCTILE IRON PIPE WITH FIELD LOCK GASKETS
7	1 EA	__" GATE VALVE (FLG x MJ) PER SBMWD STD. DWG. W3.1 WITH MEGALUG RETAINER RING
8	NOT USED	
9	1 EA	WHEN INSTALLING AIR VAC ON EXISTING MAIN, TAP TOP OF PIPE USING WELD NOZZLE OR TAPPING SLEEVE. INSTALL FLANGED GATE VALVE AS SHOWN (ABANDON VALVE IN PLACE)
10	1 EA	VALVE ASSEMBLY COVER PER SBMWD STD. DWG. W7.6. 20" DIA. X 36" ARMORCAST ENCLOSURE
11		2,000 PSI CONCRETE: 2'-6" SQ. X 10" DEEP CONC. PAD (FORMED)
12		3/4" POORLY GRADED GRAVEL

REVISION DATE: 3/30/2016

D.D.M.	MAR. 16	SAN BERNARDINO MUNICIPAL WATER DEPARTMENT	DRAWING NUMBER
D.D.M.	JAN. 11	**3" AND LARGER COMBINATION AIR VACUUM AND RELEASE VALVE AND AIR VACUUM VALVE**	SBMWD
M.N.	AUG. 08		
C.L.R.	NOV. 05		W7.2
REVISION	DATE	APPROVED _____ MIGUEL J. GUERRERO, P.E. RCE C73239 DATE 4/18/16	
SCALE:	NONE		