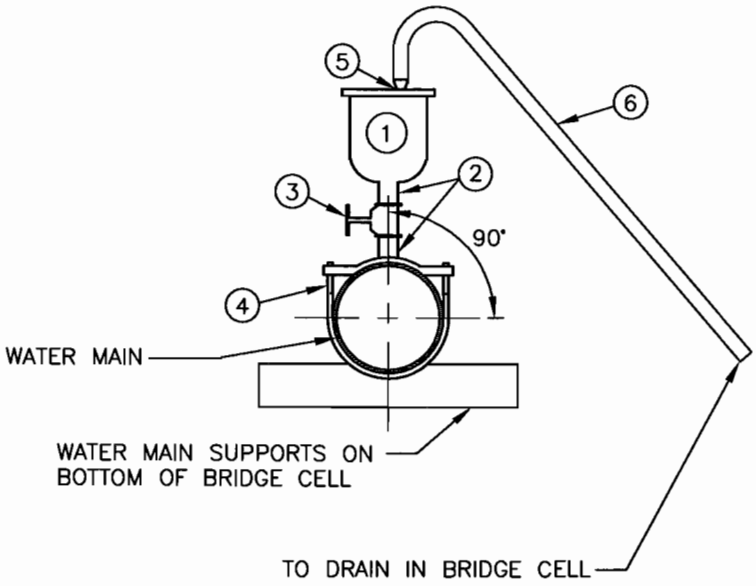

ITEM	QTY	DESCRIPTION
1	1 EA.	1" MIDGET AIR RELEASE VALVE CRISPIN M10 W/1/16" ORIFICE, OR APPROVED EQUAL
2	2 EA.	1" MALE THREADED NIPPLE
3	1 EA.	1" BRONZE WHEEL VALVE (FEMALE THREAD)
4	1 EA.	___" x 1" BRONZE SERVICE SADDLE*
5	1 EA.	3/8" THREAD x 1" FLARE (BRONZE)
6	10 L.F.	1" TYPE K SOFT COPPER TUBING

NOTE:
DIRECT TAPPING DUCTILE IRON MAINS WITH 1" OR SMALLER SERVICE LINES REQUIRES SBMWD APPROVAL OF EQUIPMENT AND METHODS. SBMWD INSPECTOR MUST BE PRESENT WHEN DIRECT TAPS ARE MADE.

REVISION DATE: 4/4/2011

		SAN BERNARDINO MUNICIPAL WATER DEPARTMENT	DRAWING NUMBER
D.D.M.	APR. 11	**1" AIR RELEASE VALVE IN BRIDGE STRUCTURE**	SBMWD
M.H.L.	FEB. 04		W7.4
REVISION	DATE	APPROVED ____ MATTHEW H. LITCHFIELD, P.E. RCE 58079 DATE 10/11/11	
SCALE: NONE			