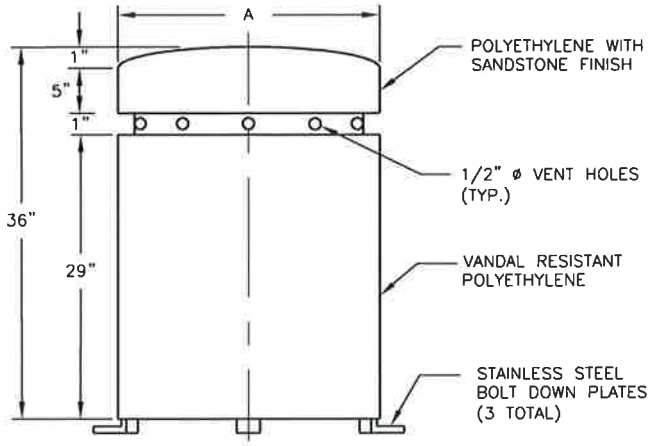

FRONT

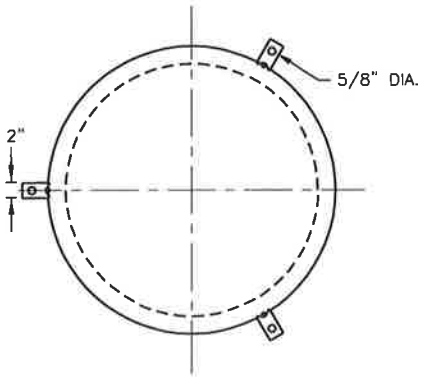

PLAN

SIZING FOR AIR VALVE ASSEMBLY COVER		
VALVE SIZE	A (DIAMETER)	B (HEIGHT)
1" & 2"	12"	36"
3", 4" & 6"	20"	36"
8"	24"	36"

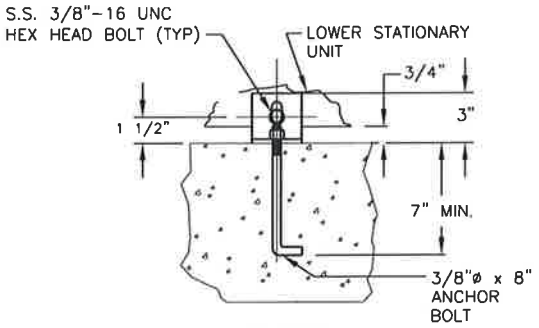

FOOTINGS

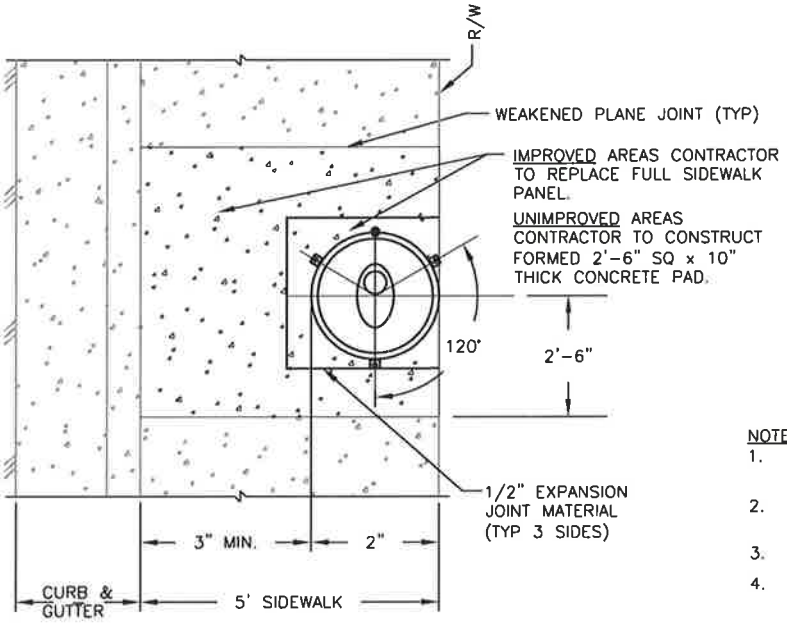

PLAN IN SIDEWALK

NOTES:

1. ENGINEER TO VERIFY THE REQUIRED SIZE AND TYPE OF AIR VALVE ASSEMBLY PER PROJECT REQUIREMENTS.
2. USE ONLY THE APPROPRIATE STD. DRAWING(S) AND DESCRIPTIONS FOR CORRECT SIZE OF AIR VALVE ASSEMBLY.
3. MODEL NO. P6002001, 2 or 3 BY AMORCAST 1-818-982-3600.
4. ALL EXPOSED FERROUS METAL SHALL BE COATED PER SPECS. EXTERIOR COLOR TO BE SANDSTONE FINISH.

REVISION DATE: 3/31/2016

D.D.M.	MAR. 16
D.D.M.	JAN. 11
C.L.R.	NOV. 05
REVISION	DATE
SCALE:	NONE

SAN BERNARDINO MUNICIPAL WATER DEPARTMENT

ARMORCAST (POLYETHYLENE) ENCLOSURE FOR AIR VALVE ASSEMBLY

APPROVED _____ DATE 4/18/16

MIGUEL J. GUERRERO, P.E. RCE C73239

DRAWING NUMBER

SBMWD

W7.6