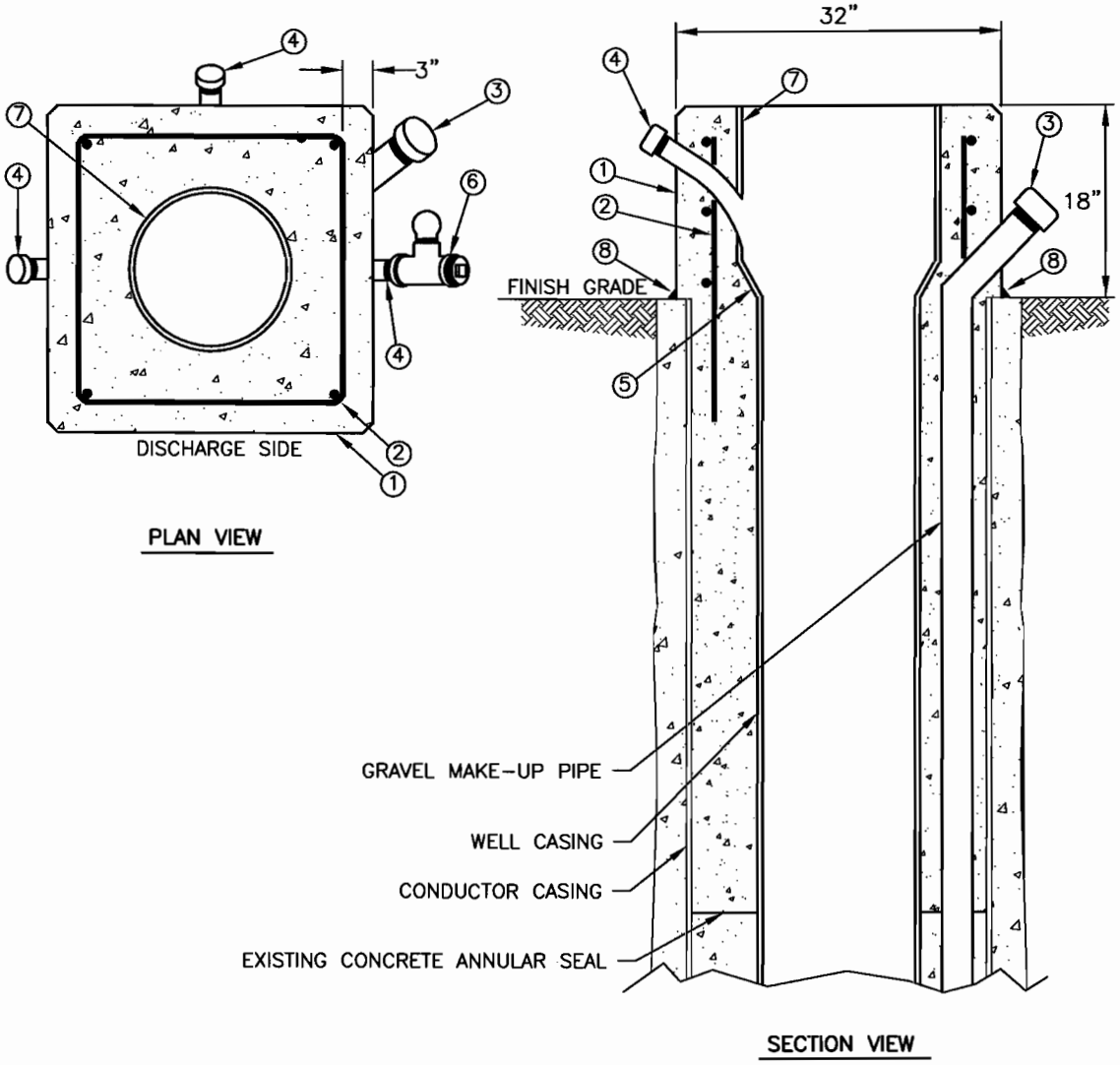

ITEM	DESCRIPTION
1	POURED CONCRETE PUMP BASE (6 SACK MIX) CHAMFER ALL EDGES TO 1"
2	NO. 4 REBAR
3	3" STEEL GRAVEL MAKE-UP PIPE (WELD TO EXISTING) W/ THREADED CAP
4	2" STEEL SOUNDING TUBE W/ THREADED CAP (FABRICATE FROM 2" STEEL ELEC. CONDUIT SWEEP & WELD TO CASING) ALL INTERIOR WELDS TO BE GROUND SMOOTH
5	___" x 20" STEEL WELD REDUCER (AS NEEDED)
6	CASING VENT (2" STEEL TEE W/ THREADED PLUG AND SCREENED 2" 90° STREET BEND)
7	20" DIA. 5/16" WALL, STEEL CASING PIPE
8	CONTINUOUS BEAD OF SILICONE SEALANT

REVISION DATE: 4/6/2011

		SAN BERNARDINO MUNICIPAL WATER DEPARTMENT	DRAWING NUMBER
D.D.M.	APR. 11	**WELL HEAD COMPLETION**	SBMWD
M.H.L.	FEB. 04		W9.1
REVISION	DATE	APPROVED _____ DATE 10/11/11	
SCALE: NONE		MATTHEW H. LITCHFIELD, P.E. RCE 58079	