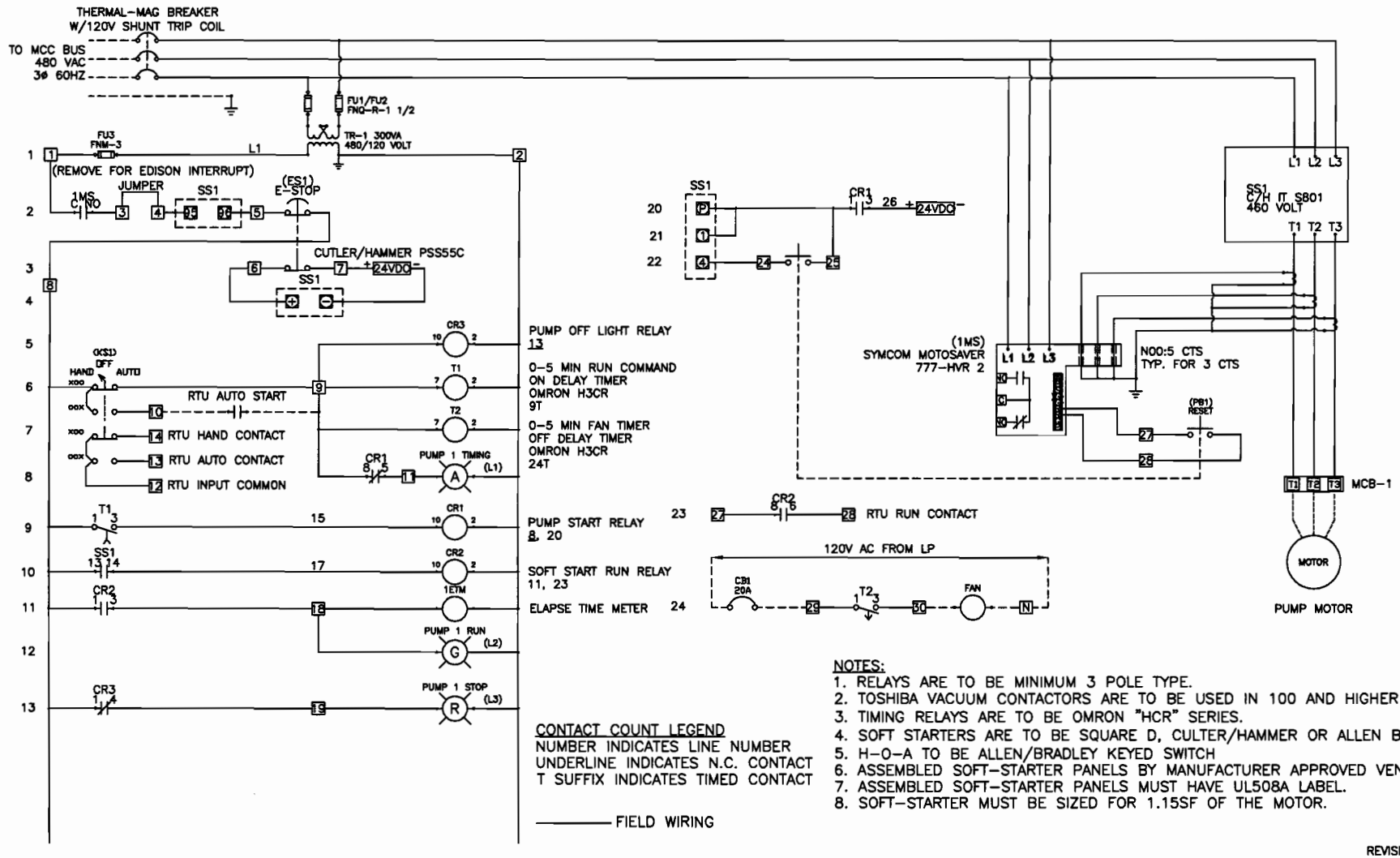

CONTACT COUNT LEGEND
NUMBER INDICATES LINE NUMBER
UNDERLINE INDICATES N.C. CONTACT
T SUFFIX INDICATES TIMED CONTACT

——— FIELD WIRING

NOTES:
1. RELAYS ARE TO BE MINIMUM 3 POLE TYPE.
2. TOSHIBA VACUUM CONTACTORS ARE TO BE USED IN 100 AND HIGHER HORSEPOWERS.
3. TIMING RELAYS ARE TO BE OMRON "HCR" SERIES.
4. SOFT STARTERS ARE TO BE SQUARE D, CULTER/HAMMER OR ALLEN BRADLEY ONLY.
5. H-O-A TO BE ALLEN/BRADLEY KEYED SWITCH
6. ASSEMBLED SOFT-STARTER PANELS BY MANUFACTURER APPROVED VENDORS ONLY.
7. ASSEMBLED SOFT-STARTER PANELS MUST HAVE UL508A LABEL.
8. SOFT-STARTER MUST BE SIZED FOR 1.15SF OF THE MOTOR.

REVISION DATE: 4/11/2011

D.D.M.	APR. 11
M.H.L.	APR. 05
REVISION	DATE
SCALE:	NONE

SAN BERNARDINO MUNICIPAL WATER DEPARTMENT

THREE LINE AND CONTROL
CUTLER HAMMER IT S801 SOFT STARTER PUMPS/WELLS

APPROVED _____ DATE 10/11/11

MATTHEW H. LITCHFIELD, P.E. RCE 58079

DRAWING NUMBER

SBMWD

W11.3