PANEL FRONT VIEW

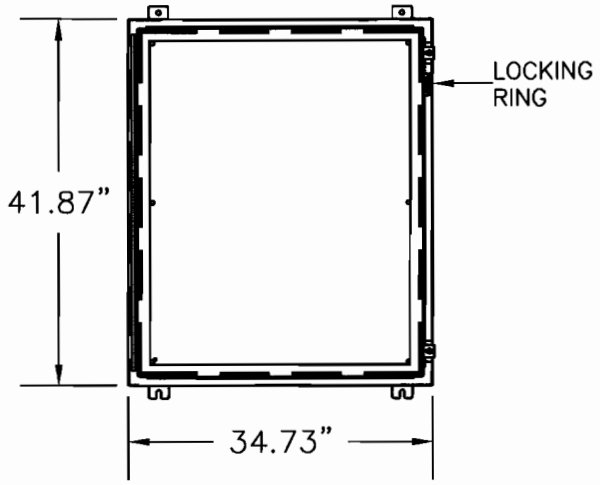

PANEL RIGHT SIDE VIEW

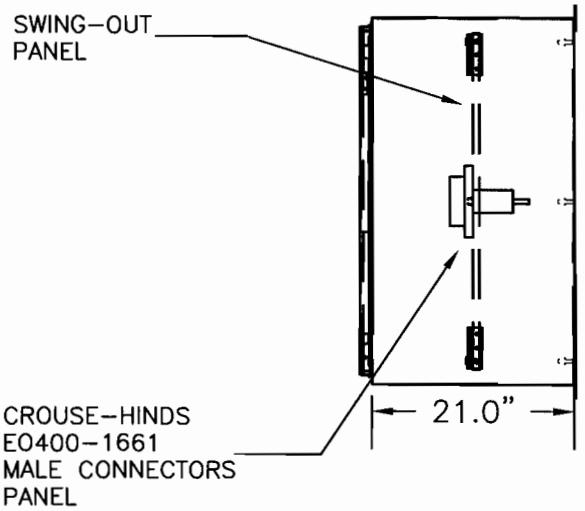

INTERNAL COMPONENTS LAYOUT

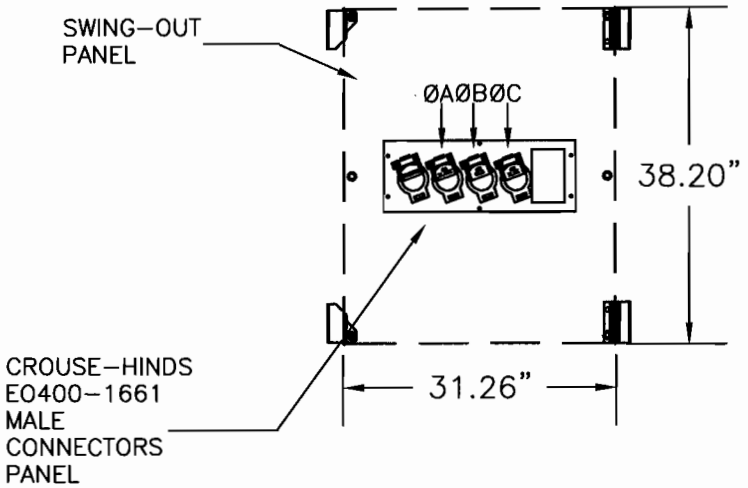

NOTES:

1. ØA = BLACK, ØB = RED, ØC =BLUE
2. INDUSTRIAL ENCLOSURE SHOULD BE NEMA TYPE 4X

REVISION DATE: 9/27/2011

		SAN BERNARDINO MUNICIPAL WATER DEPARTMENT	DRAWING NUMBER
F.D.L	SEPT. 11	**EMERGENCY POWER PANEL DETAIL**	SBMWD
D.D.M.	APR. 11		W11.9
REVISION	DATE	APPROVED _____ DATE 10/11/11	
SCALE: NONE		MATTHEW H. LITCHFIELD, P.E. RCE 58079	SHEET 1 OF 2