PANEL TOP VIEW

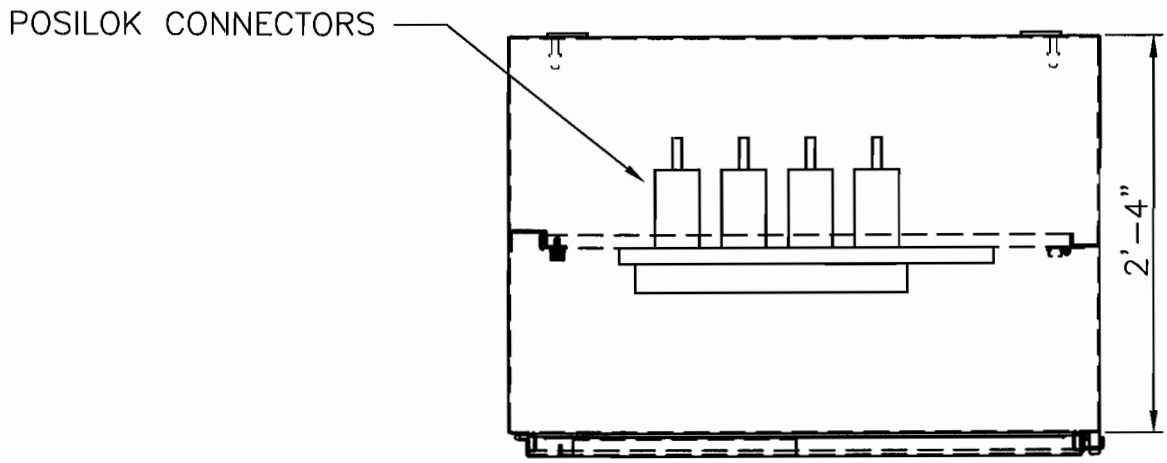

PANEL BOTTOM VIEW

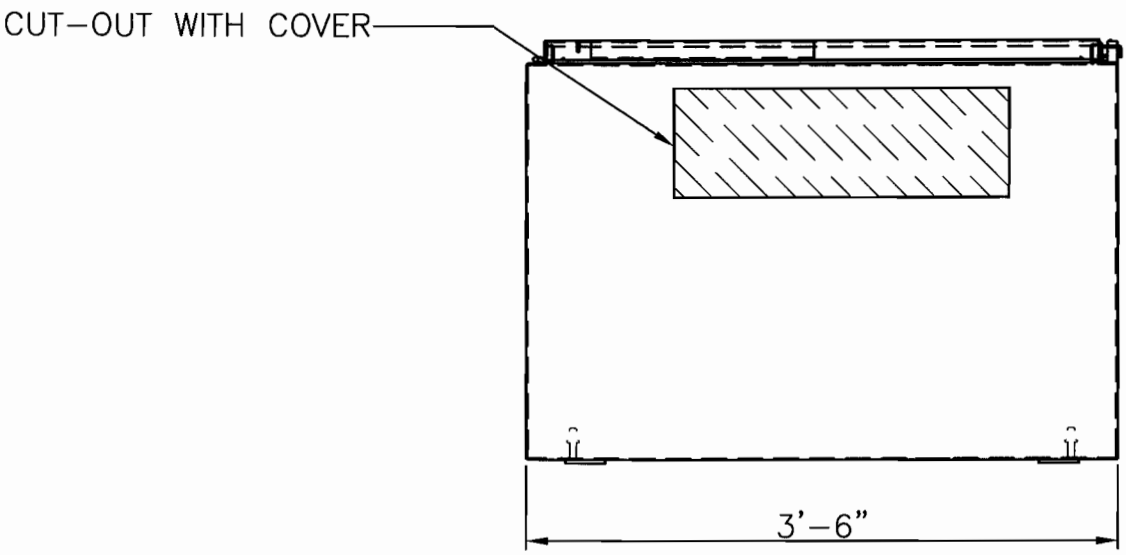

REVISION DATE: 4/12/2011

		SAN BERNARDINO MUNICIPAL WATER DEPARTMENT	DRAWING NUMBER
		EMERGENCY POWER PANEL DETAIL	SBMWD
D.D.M.	APR. 11		W11.9
REVISION	DATE	APPROVED MATTHEW H. LITCHFIELD, P.E. RCE 58079 DATE 10/11/11	
SCALE: NONE			SHEET 2 OF 2