| ITEM | DESCRIPTION |
|---|---|
| 1 | INSTALL 8" DUCTILE IRON PIPE (D.I.P.), PRESSURE CLASS 350 (CUT TO FIT). |
| 2 | INSTALL 8" (F x MJ) RESILIENT SEAT GATE VALVE PER SBMWD STD. DWG. W3.1. |
| 3 | INSTALL 8" (F) DUCTILE IRON TEE. |
| 4 | INSTALL 8" (F x MJ) ADAPTER. |
| 5 | INSTALL 8" FLEXIBLE COUPLING. |
| 6 | INSTALL 8" DUCTILE IRON 90° (MJ) ELBOW. |
| 7 | INSTALL 8" (F) DUCTILE IRON SPOOL, PRESSURE CLASS 350. |
| 8 | INSTALL 8" (F x PLAIN END) DUCTILE IRON SPOOL, PRESSURE CLASS 350. |
| 9 | INSTALL 8" CLA VAL 600 SERIES (CONTROLS TO BE CALLED OUT BY SBMWD) |
| 10 | INSTALL 8" RESTRAINED FLEXIBLE COUPLING RESTRAINT PER SBMWD STD. DWG. W6.27. |
| 11 | INSTALL 1" PRESSURE GAUGE OUTLET PER SBMWD STD. DWG. W6.32. |
| 12 | INSTALL PIPE SUPPORT OR UNDER FLANGE PIPE SUPPORT PER SBMWD STD. DWG. W6.28. |
| 13 | INSTALL 1" DRAIN CONNECTION PER SBMWD STD. DWG. W6.31. |
| 14 | INSTALL PRECAST CONCRETE VAULT (DIMENSIONS PER PLAN). |
| 15 | INSTALL 5' x 8' ALUMINUM TROUGH FRAME HS-20 LOADING SPRING ASSISTED DOUBLE DOOR WITH 1-1/2" PIPE COUPLING, BOTTOM OUTLET DRAIN, PER SBMWD STD. DWG. W6.21. |
| 16 | INSTALL FRP LADDER WITH LADDER UP DEVICE PER SBMWD STD. DWG. W6.22. |
| 17 | INSTALL LINK SEAL PER SBMWD STD. DWG. W6.19. |
| 18 | INSTALL 12" DIAMETER SUMP PER SBMWD STD. DWG. W6.30. |
| 19 | INSTALL 8" AIR VENT, TYPE 1, PER SBMWD STD. DWG. W6.29. |
| 20 | INSTALL PVC WALL INSERT PER SBMWD STD. DWG. W6.33. |
| 21 | INSTALL 1" AIR AND VACUUM RELEASE VALVE PER SBMWD STD. DWG. W7.3. |
| 22 | INSTALL MINIMUM 6" THICK, 3/4" CRUSHED ROCK BACKFILL (NO FINES). |
| 23 | INSTALL 6" THICK BACKFILL, SE 30 OR BETTER, 95% COMPACTION. |
| 24 | INSTALL 1/2" EXPANSION JOINT ON ALL FOUR SIDES |

NOTES:

1. PIPING AND APPURTENANCE DIAMETERS AND LENGTHS MAY VARY BASED ON DESIGN FLOW RATE. DIAMETERS AND DIMENSIONS SHOWN ARE FOR AN 8" PRESSURE REDUCING STATION
2. STANDARD DRAWING DOES NOT INDICATE REQUIRED ELECTRICAL APPURTENANCES

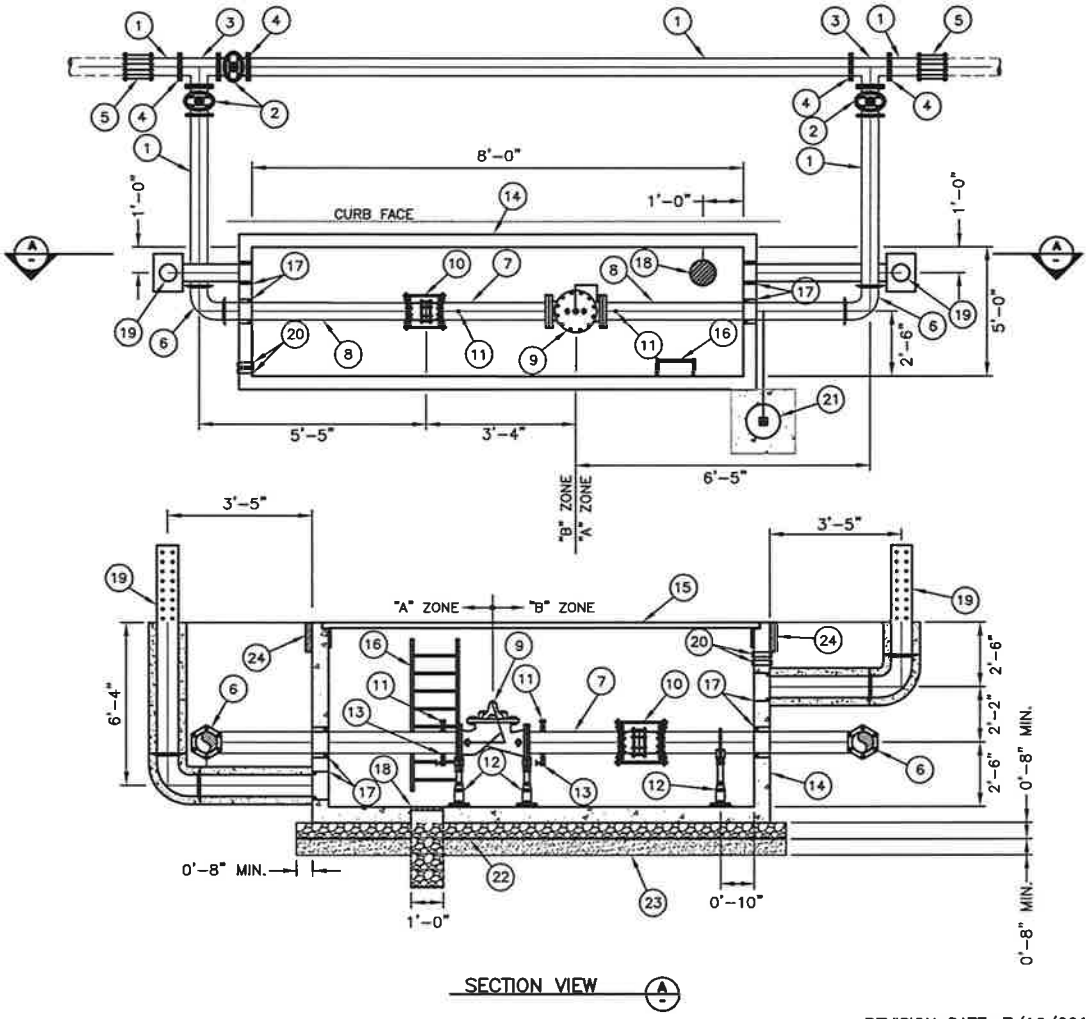


REVISION DATE: 7/16/2014

| | |
|---|---|
| F.D.L. | JULY 14 |
| D.D.M. | APR. 11 |
| M.H.L. | OCT. 07 |
| REVISION | DATE |
| SCALE: | NONE |

# BELOW GROUND PRESSURE REDUCING STATION

APPROVED _____ DATE 7/28/14

MATTHEW H. LITCHFIELD, P.E. RCE 58079

DRAWING NUMBER

SBMWD

W3.9