CONFIGURATION OPTIONS

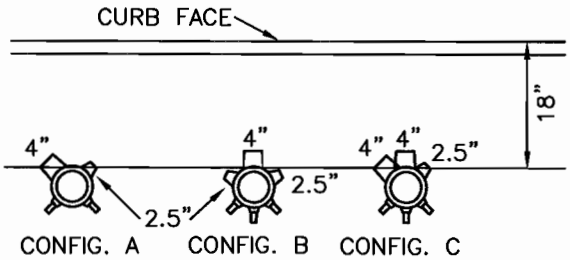

CONFIGURATION	DESCRIPTION
A	1 – 4" OUTLET; 1 – 2.5" OUTLET
B	1 – 4" OUTLET; 2 – 2.5" OUTLETS
C	2 – 4" OUTLETS; 1 – 2.5" OUTLET

NOTES:

1. WHERE A CONCRETE SIDEWALK DOES NOT EXIST, A 4" THICK CONCRETE PAD, 3' X 3', SHALL BE POURED AROUND BREAK–OFF VALVE ASSEMBLY AT FINAL GRADE.
2. ALL BOLTS AND NUTS TO BE STANDARD GRADE 5 ZINK PLATED.

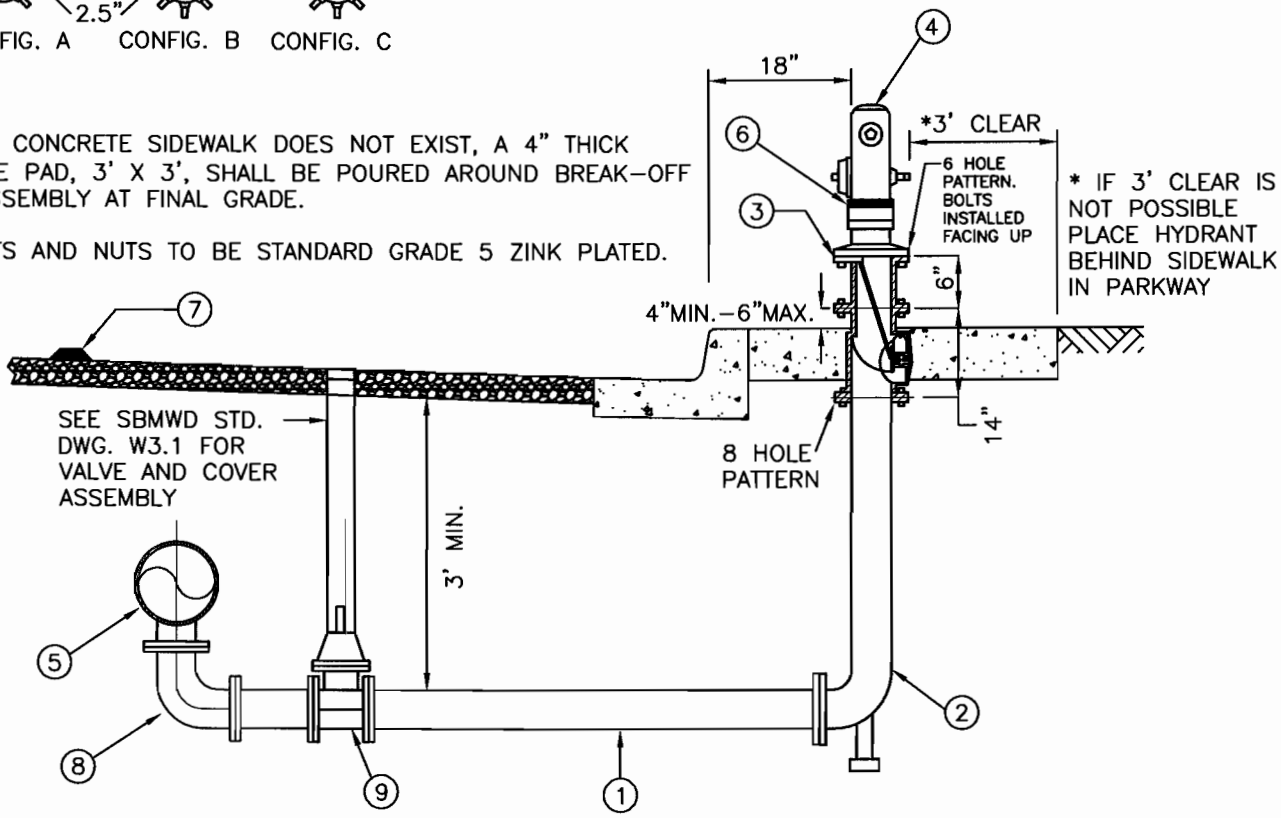

ITEM	QTY	DESCRIPTION
1	___LF	6" CLASS 350 DUCTILE IRON PIPE RESTRAINED WITH MEGALUG OR APPROVED EQUAL
2	1 EA	___" x 6" (8 HOLE) FIRE HYDRANT BURY WITH RESTRAINED MJ INLET AND FLANGE OUTLET
3	1 EA	CLOW VALVE CO. BREAK OFF CHECK VALVE MODEL LB1 400A (NO SUBSTITUTIONS)
4	1 EA	A SBMWD APPROVED HYDRANT (SELECT THE APPROPRIATE CONFIGURATION)
5	1 EA	USE 6" DIP TEE WITH RESTRAINED BRANCH AND RUN ON NEW SYSTEMS.
6	1 EA	3" WIDE COLOR CODED REFLECTIVE MARKING TAPE PER SBMWD STD. DWG. W6.3
7	1 EA	INSTALL BLUE DOT PAVEMENT MARKERS PER SBMWD STD. DWG. W6.3
8	1 EA	INSTALL 6" – 90° DIP ELBOW (FLG X MJ)
9	1 EA	INSTALL 6" GATE VALVE, (FLG x MJ) PER SBMWD STD. DWG. W3.1

REVISION DATE: 2/16/2011

D.D.M.	FEB. 11	SAN BERNARDINO MUNICIPAL WATER DEPARTMENT	DRAWING NUMBER
D.D.M.	MAR. 09	**MANUAL BLOW OFF ASSEMBLY WITH 6" FIRE HYDRANT INSTALLATION**	SBMWD
M.N.	AUG. 08		
T.C.	NOV. 06		W2.3
REVISION	DATE	APPROVED MATTHEW H. LITCHFIELD, P.E. RCE 58079 DATE 10/11/11	
SCALE: NONE			