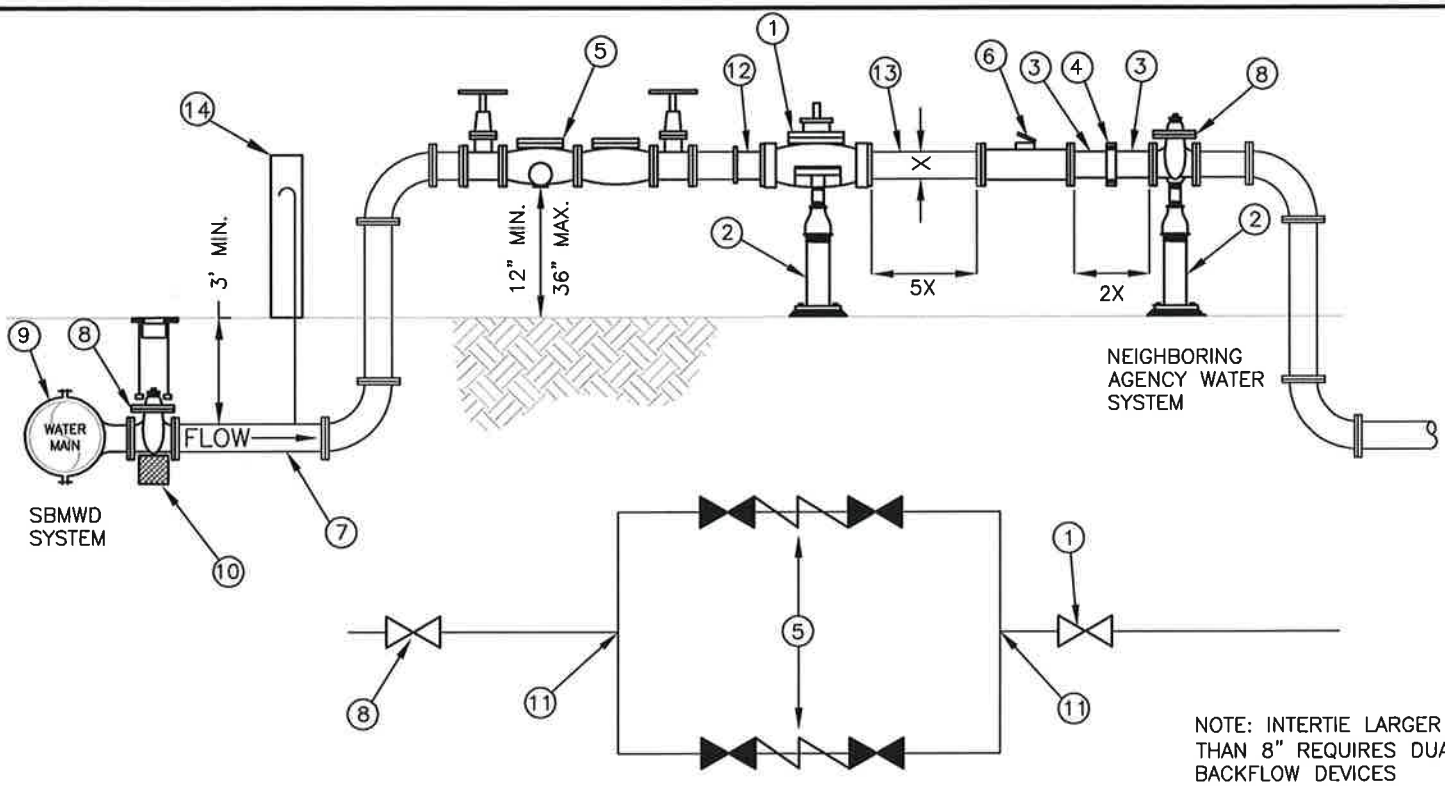

NOTE: INTERTIE LARGER THAN 8" REQUIRES DUAL BACKFLOW DEVICES

ITEM	QTY	DESCRIPTION
1	1 EA	___" CLA-VAL PRESSURE SUSTAINING VALVE
2	2 EA	ADJUSTABLE PIPE SUPPORT PER SBMWD STD. DWG. W6.28
3	2 EA	___" D.I.P. FLANGE X GROOVE ADAPTORS
4	1 EA	___" VICTAULIC COUPLING FROM THE SBMWD APPROVED LIST
5	1 EA	___" REDUCED PRESSURE PRINCIPLE BACKFLOW DEVICE (WILKINS 975 OR EQUIVALENT)
6	1 EA	___" WATER SPECIALTIES MODEL # ML04 PROPELLER METER WITH MODEL # TR16 4-20mA OUTPUT TRANSMITTER. INSTALL METER WITH MINIMUM OF 5 PIPE DIA. BEFORE AND 2 PIPE DIA. AFTER OF STRAIGHT UNOBSTRUCTED PIPE. (READS 100 CU/FT)
7	___LF	___" CLASS 350 DUCTILE IRON PIPE (RESTRAINED)
8	2 EA	___" FLANGE X MJ GATE VALVE ASSEMBLY PER SBMWD STD. DWG. W3.1 (RESTRAINED)
9	1 EA	EPOXY COATED TAPPING SLEEVE, MJ TAPPING SLEEVE, WELD NOZZLE, OR MJxFLG TEE ___" O.D. MAIN WITH ___" SERVICE LATERAL
10	1 EA	12" CONCRETE BLOCK
11	2 EA	___" X ___" DUCTILE IRON MJ TEE (RESTRAINED)
12	1 EA	___" D.I. ADAPTER (FL X MJ)
13	1 EA	___" CLASS 350 DUCTILE IRON PIPE SPOOL
14	1 EA	WATER SAMPLING STATION PER SBMWD STD. DWG. W.6.1

NOTES:

1. ANY BACKFLOW RELATED INSTALLATION AND/OR REPLACEMENT, INCLUDING PARTS, SHALL ADHERE TO THE MOST CURRENT UNIVERSITY OF SOUTHERN CALIFORNIA (USC) FOUNDATION FOR CROSS-CONNECTION CONTROL AND HYDRAULIC RESEARCH STANDARDS.

2. SWAB INTERIOR OF PIPE, VALVES, AND FITTINGS, AND SWAB INTERIOR OF EXISTING MAINS TO WHICH NEW PIPING WILL BE CONNECTED (BOTH UPSTREAM AND DOWNSTREAM OF THE NEW BACKFLOW ASSEMBLY) WITH A 5% SODIUM HYPOCHLORITE SOLUTION. AFTER DISINFECTION, FLUSH WITH POTABLE WATER AGAIN UNTIL WATER IS FREE OF CHLORINE ODOR.

REVISION DATE: 12/5/2012

		SAN BERNARDINO MUNICIPAL WATER DEPARTMENT	DRAWING NUMBER
F.D.L.	DEC. 12	**INTERTIE TO NEIGHBORING AGENCIES ABOVE GRADE**	SBMWD
G.B.	APRIL 11		
D.D.M.	MAR. 11		W4.7
REVISION	DATE	APPROVED ___ DATE 2/7/13	
SCALE: NONE		MATTHEW H. LITCHFIELD, P.E. RCE 58079	