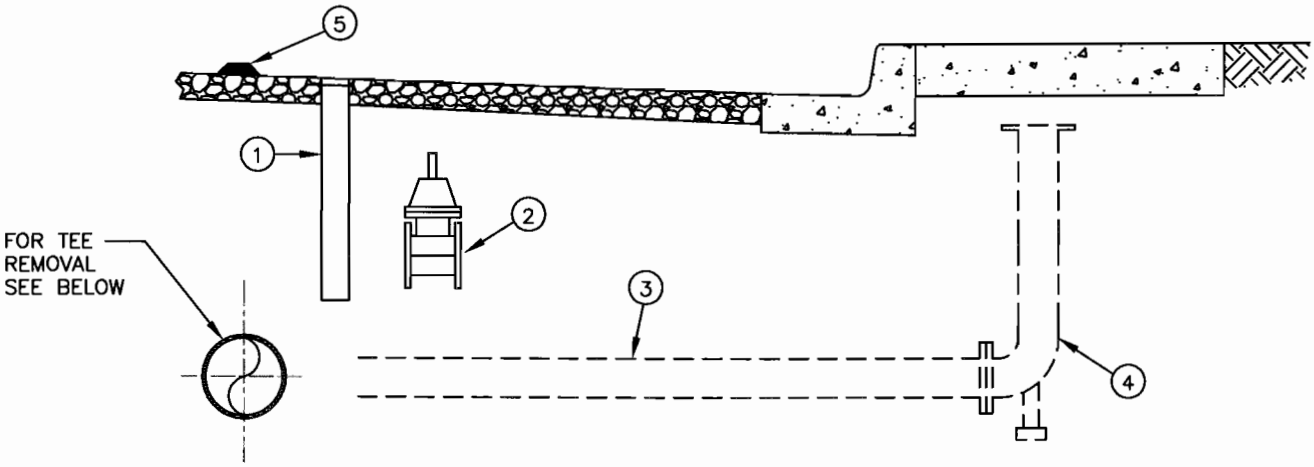

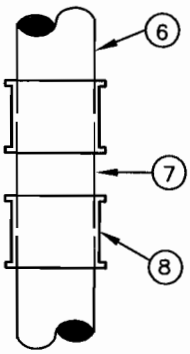

TEE REMOVAL

NOTES:

1. SBMWD ENGINEER OR FIELD INSPECTOR TO MAKE DETERMINATION OF APPROPRIATE MATERIALS TO USE AND HOW APPURTENANCES ARE ABANDONED. TEES WITH LEAD CAULKED JOINTS SHALL BE REMOVED AND REPLACED WITH LIKE SIZE D.I. PIPE.
2. IF EXISTING PIPE AND TEE ARE STEEL, USE FLEX COUPLINGS TO MAKE RE-CONNECTION.
3. IF EXISTING PIPE AND TEE ARE CAST OR DUCTILE IRON, USE EITHER A PAIR OF D.I. M.J. SLEEVES OR FLEX COUPLINGS. A BELL END OF D.I. PIPE MAY BE SUBSTITUTED FOR ONE SLEEVE OR COUPLING.
4. THIS STANDARD DRAWING MAY BE USED FOR IN-LINE VALVE REMOVAL OR OTHER IN-LINE APPURTENANCES AS DIRECTED BY SBMWD.
5. REPAIR OR REPLACE STREET AND SIDEWALK SURFACES PER CITY OF SAN BERNARDINO PUBLIC WORKS STANDARDS. ALL TRENCHES SHALL BE BACKFILLED PER SBMWD STD. DWG. W5.1.

ITEM	QTY	DESCRIPTION
①		REMOVE GATE CAN ASSEMBLY, IF PRESENT.
②		REMOVE GATE VALVE.
③		ABANDON OR REMOVE PIPE LATERAL – AS DIRECTED BY SBMWD.
④		ABANDON OR REMOVE APPURTENANCES (HYDRANT, BURY, ETC.) – AS DIRECTED BY SBMWD.
⑤		REMOVE BLUE DOT PAVEMENT MARKER(S), IF PRESENT.
⑥		FOR PIPE WITH LEAD CAULKED JOINTS, PROTECT EXISTING PIPE IN PLACE, REMOVE TEE.
⑦	__LF	INSTALL LIKE SIZED DUCTILE IRON PIPE.
⑧	2 EA	INSTALL DUCTILE IRON M.J. SLEEVE OR FLEX COUPLING – AS DIRECTED BY SBMWD. IF EXISTING PIPE IS DUCTILE IRON, RESTRAIN WITH MEGALUG OR EQUIVALENT. IF EXISTING PIPE IS CAST IRON, DO NOT USE MECHANICAL RESTRAINT.

REVISION DATE: 3/15/2011

		SAN BERNARDINO MUNICIPAL WATER DEPARTMENT	DRAWING NUMBER
D.D.M.	MAR. 11	**FIRE HYDRANT, VALVE, AND TEE REMOVAL DETAIL**	SBMWD
R.L.L.	SEPT. 10		W6.13
REVISION	DATE	APPROVED MATTHEW H. LITCHFIELD, P.E. RCE 58079 DATE 10/11/11	
SCALE:	NONE		