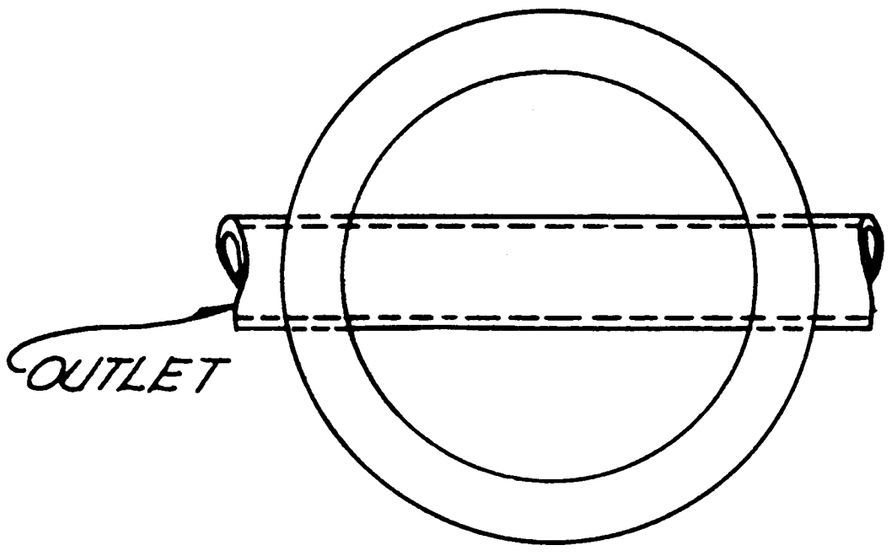

TYPE "A" MANHOLE

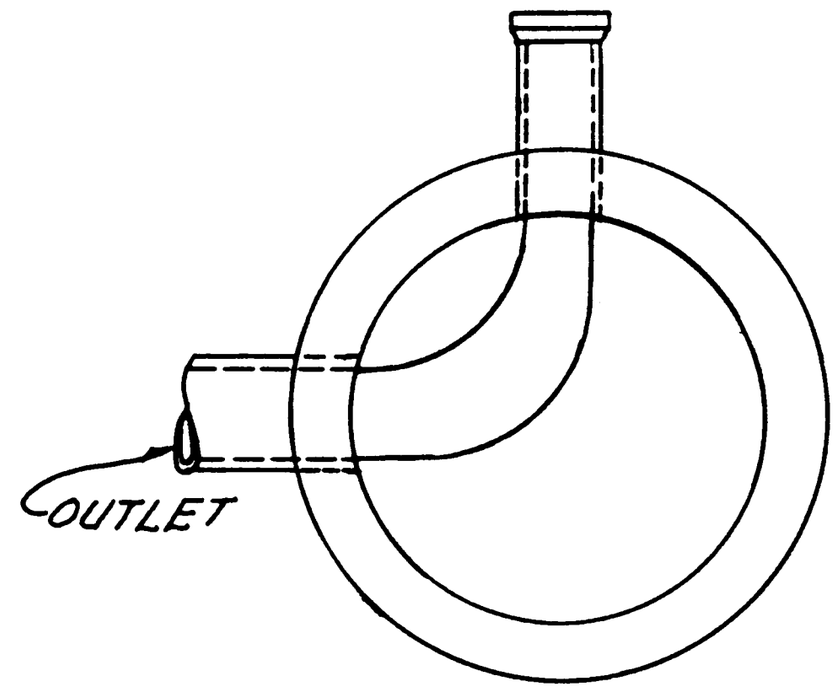

TYPE "B" MANHOLE

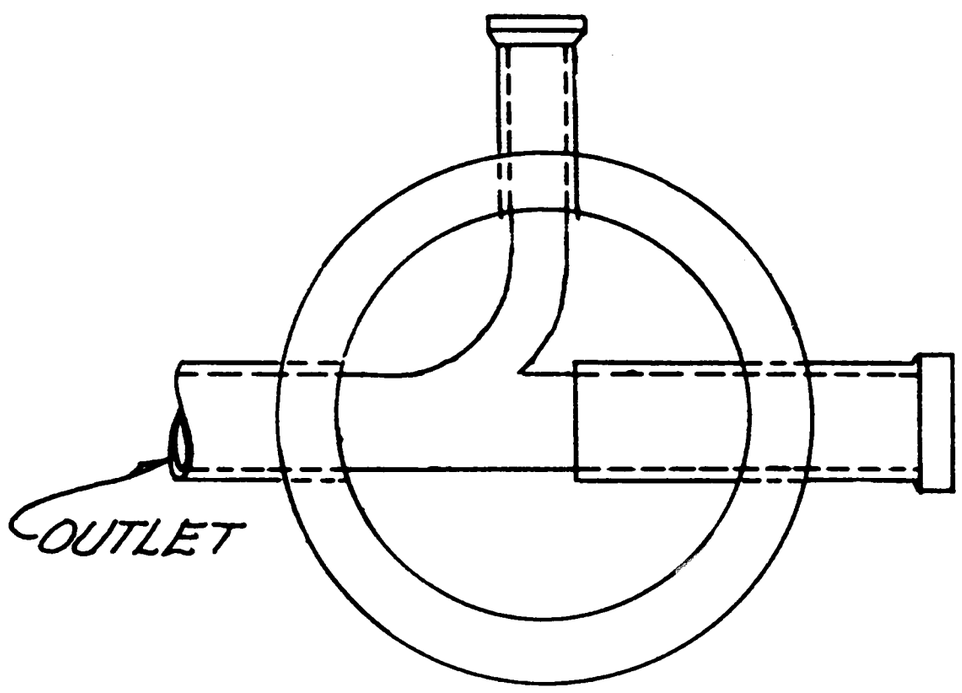

TYPE "C" MANHOLE

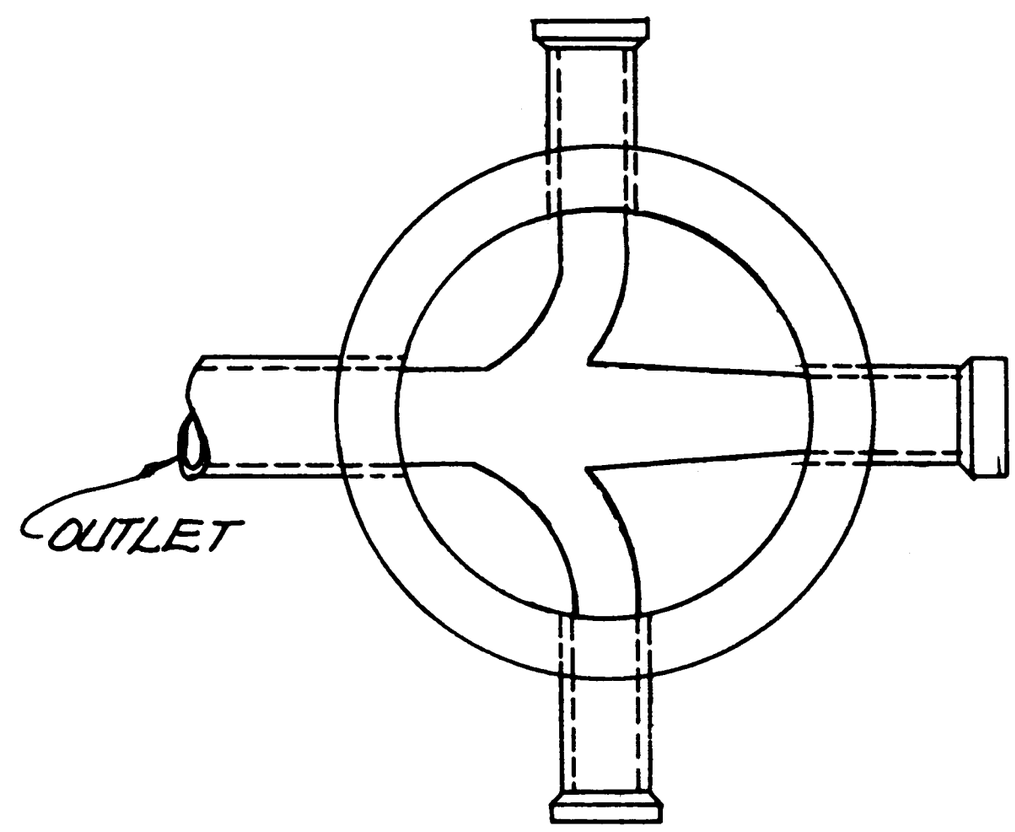

TYPE "D" MANHOLE

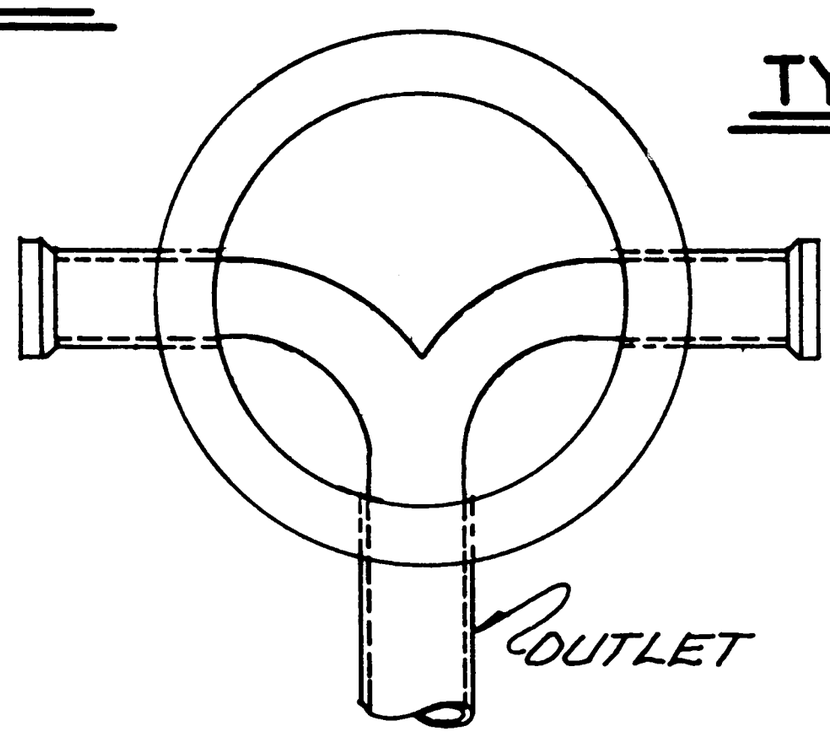

TYPE "E" MANHOLE

CITY OF SAN BERNARDINO PUBLIC WORKS DEPARTMENT

STANDARD MANHOLE FLOW CHANNELS

APPROVED

[illegible] 16, 1983

DIR. OF PUBLIC WORKS/CITY ENG

DWG. NO.

300