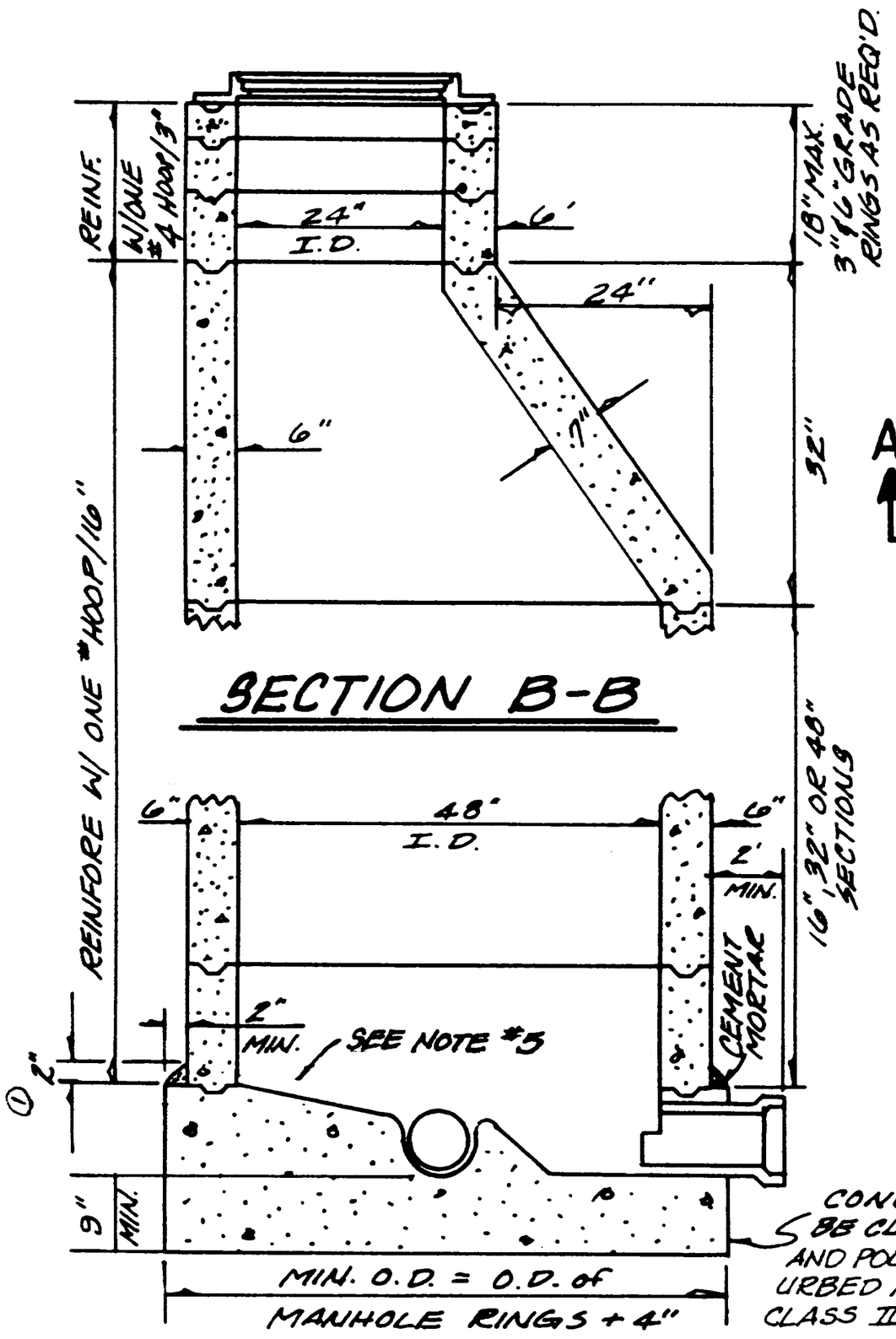

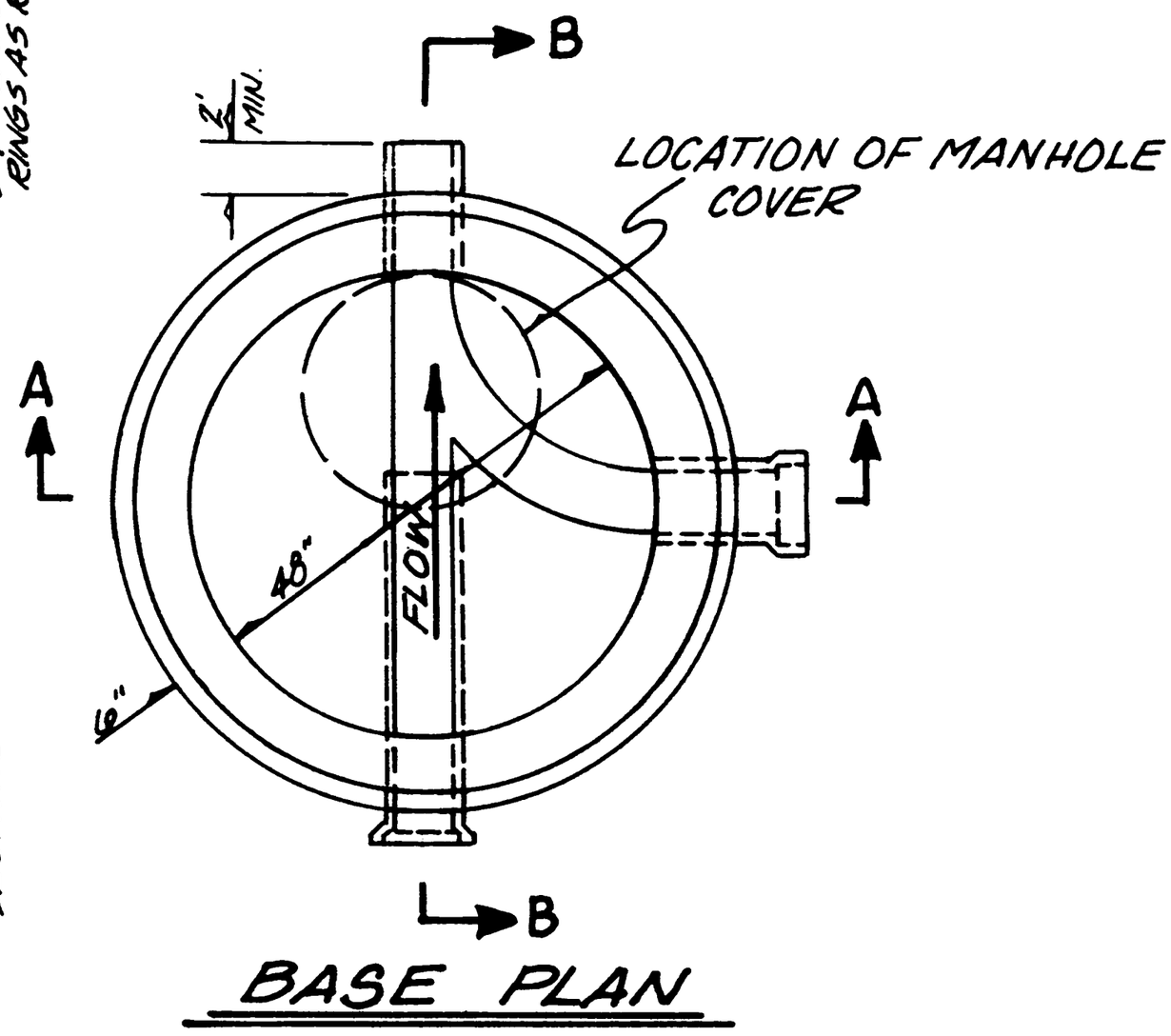

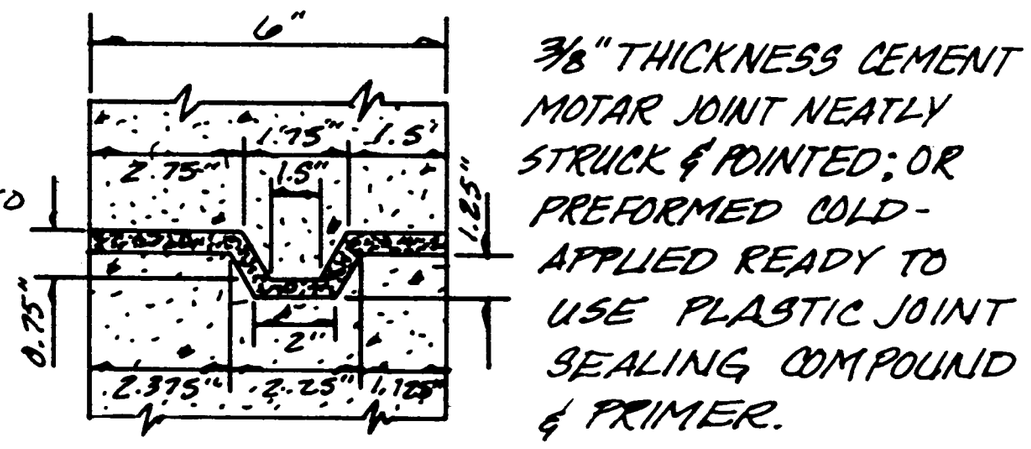

JOINT DETAIL

NOTES:

1.) Precast reinforced concrete manholes shall conform to the applicable requirements of A.S.T.M. and: A) shall be designed for A.A.S.H.O. H-20 loading,
B) concrete shall be compactly vibrated, centrifugally spun or machanically tamped.
C) one piece cone-and-shaft will not be accepted.

2.) For subdivision work, manholes frames & covers to be constructed 6" below offical street grades by sewer contractor. Paving contractor to adjust fraves & covers to official grade after paving.

3.) Manholes shall be coated inside (including manhole flow channels & grade rings) with Hunts Process Black No. 120. prior to installation.

4.) Manhole water stops shall be installed with P.V.C., A.B.S. or A.C.P. pipes.

② 5.) When a manhole is modified a 1/2" cement motar trowled smooth finish is to be placed in new channel

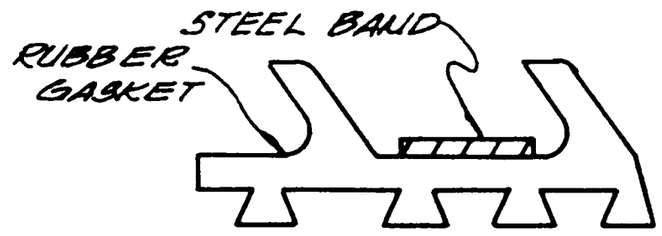

MANHOLE WATER STOP

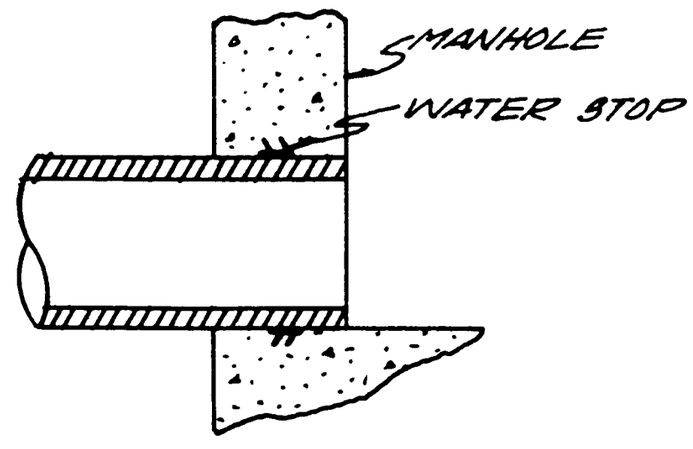

WATER STOP PLACEMENT

REV. ②	Added note #5 & concrete pouring note		28 MARCH '84
REV. ①	Added dimention of cement mortar		28 MARCH '84

CITY OF SAN BERNARDINO PUBLIC WORKS DEPT.

PRECAST REINFORCED CONC. STD. 48" I.D. MANHOLE

APPROVED: 5-16, 1983

DIR. OF PUBLIC WORKS/CITY ENGINEER

STANDARD NO. 301