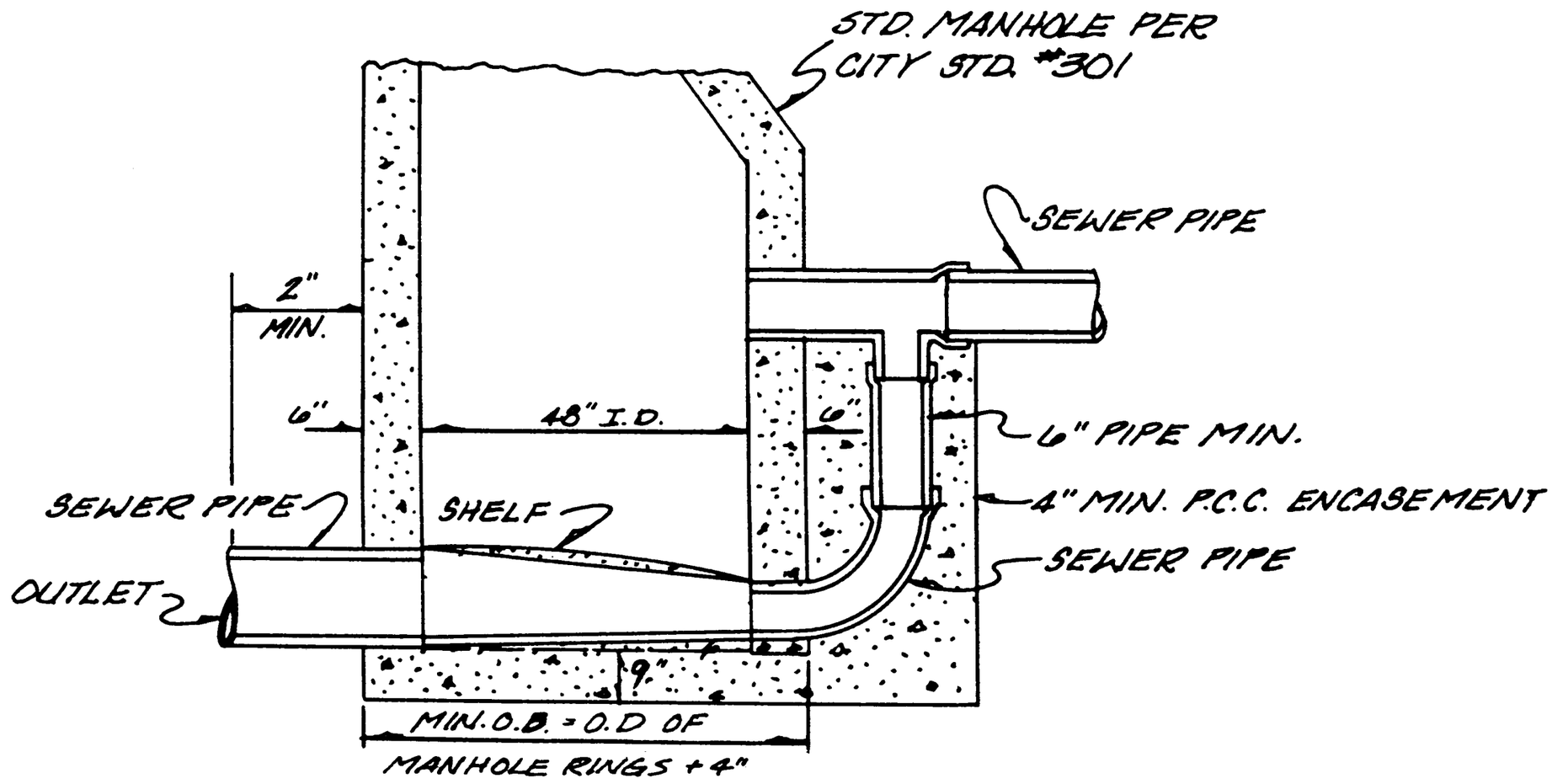

DROP MANHOLE

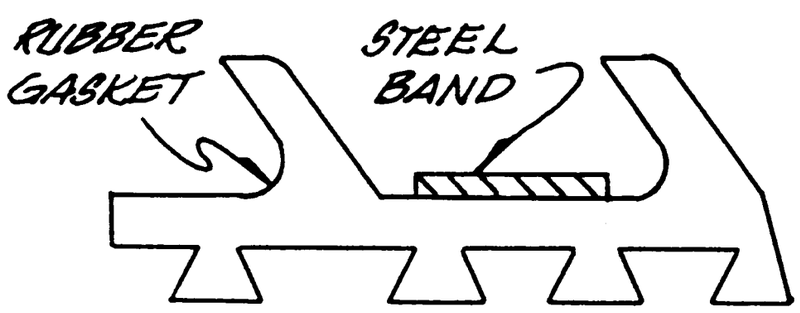

MANHOLE WATER STOP

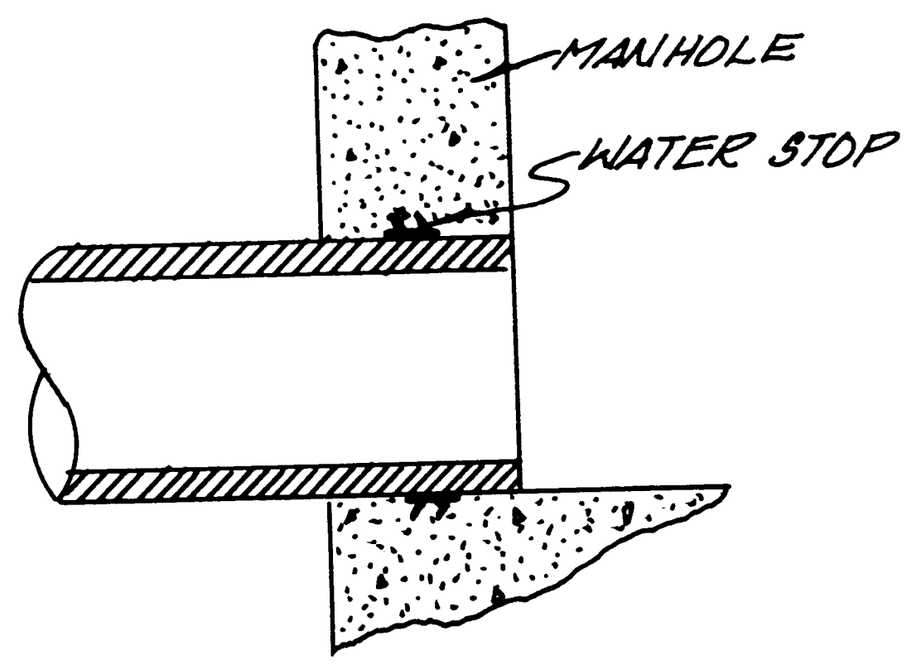

WATER STOP PLACEMENT

NOTE: WATER STOPS SHALL BE INSTALLED WITH P.V.C., A.B.S. OR A.C.P. PIPES.

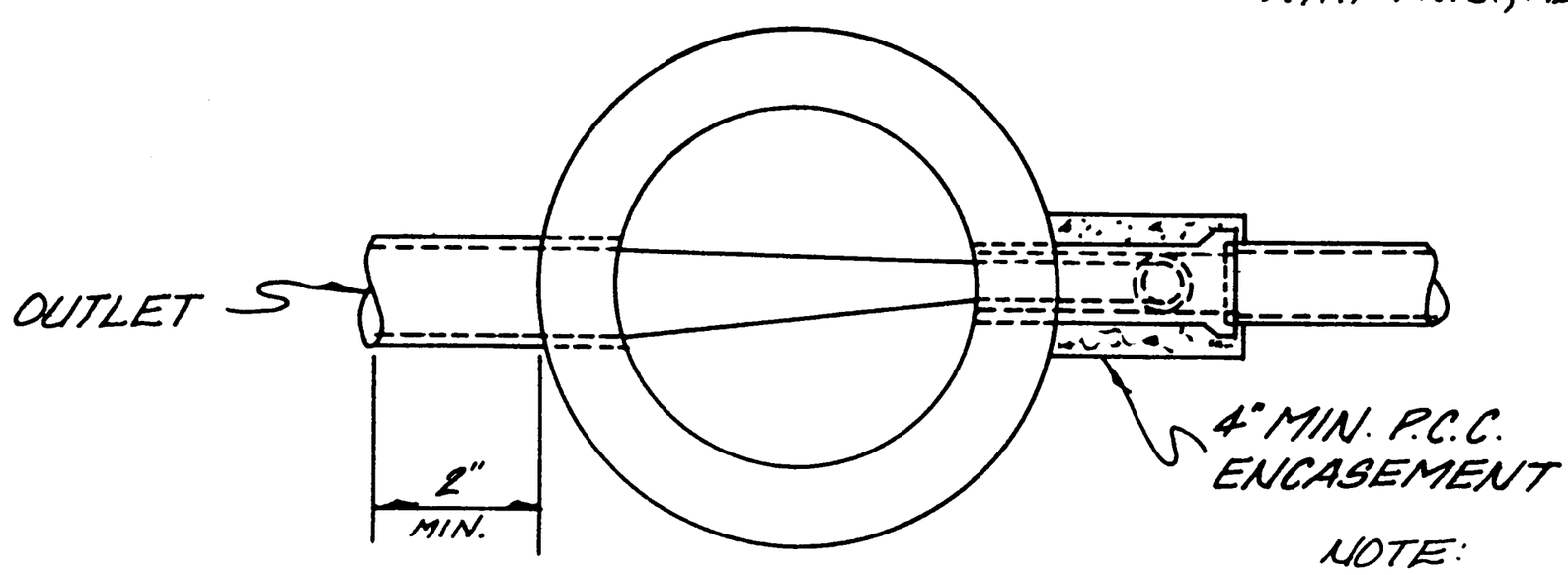

DROP MANHOLE FLOW CHANNEL

NOTE:
For Subdivision work, manhole frames & covers to be constructed 6" below official street grades by sewer contractor. Paving contractor to adjust frames & covers to official grade after paving.

CITY OF SAN BERNARDINO PUBLIC WORKS DEPT.	APPROVED:	DWG. NO.
STANDARD DROP MANHOLE	5-16, 1983 DIR. OF PUBLIC WORKS/CITY ENGINEER	**302**