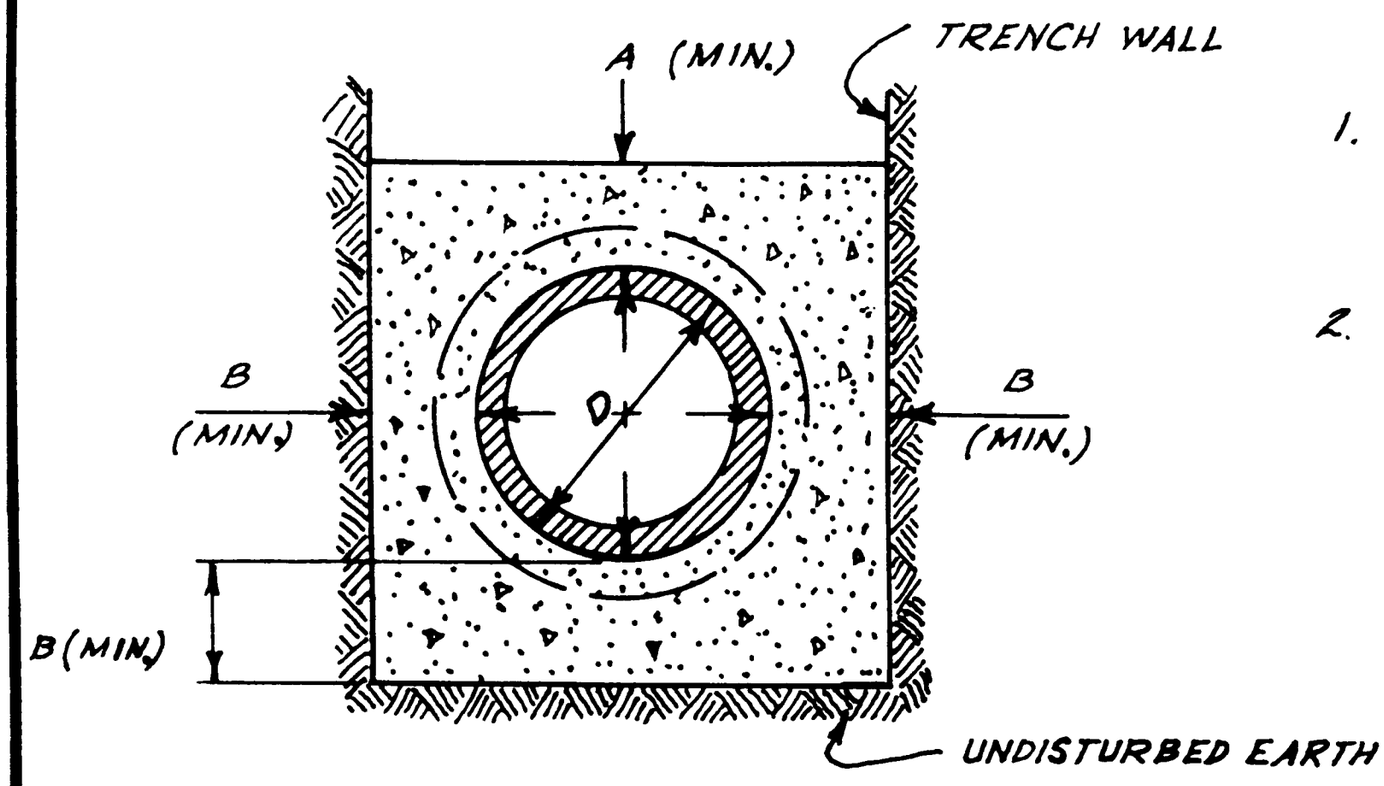


## CONCRETE ENCASEMENT NO. 1

## NOTES:

1. CONCRETE ENCASEMENT SHALL BE INSTALLED AS REQUIRED BY THE SPECIFICATIONS OR DIRECTED BY THE ENGINEER.
2. CONCRETE SHALL BE CLASS 420-C-2000

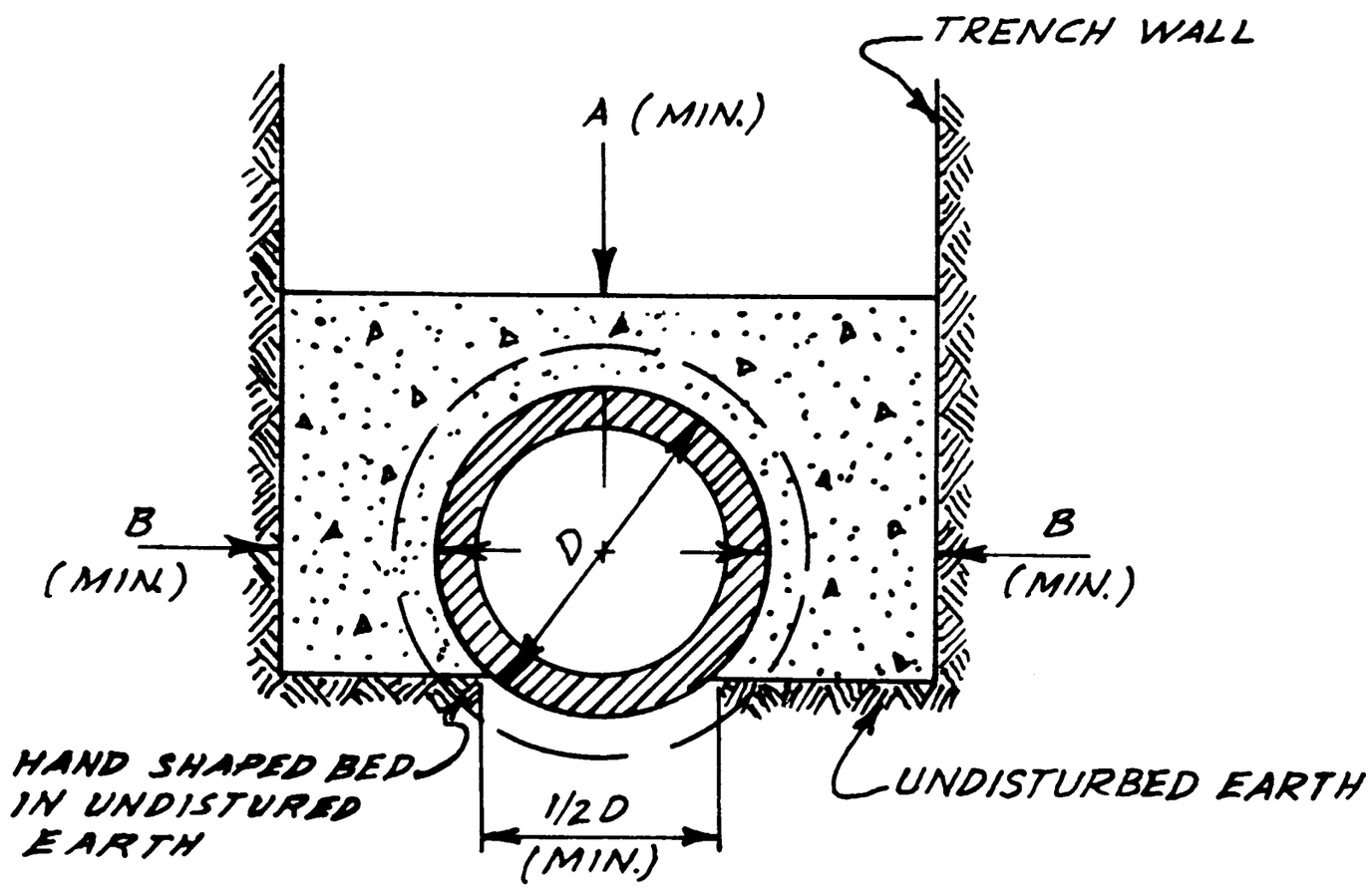


| PIPE | DIMENSIONS | |
|---|---|---|
| I.D. | A | B |
| 4" | 4" | 4" |
| 6" | 4" | 4" |
| 8" | 4" | 4" |
| 10" | 4" | 4" |
| 12" | 4" | 4" |
| 15" | 4" | 4" |
| 18" | 5" | 5" |
| 21" | 5" | 5" |
| 24" | 6" | 6" |
| 27" | 6" | 7" |
| 30" | 6" | 8" |

## CONCRETE ENCASEMENT NO. 2

| | | |
|---|---|---|
| REV. 2. | ADD. NOTE #2 | APPR. 5-4-83 |
| REV. 1 | Revised Standard No. | Appr. 8/22/78 |

CITY OF SAN BERNARDINO - PUBLIC WORKS DEPT.

**STANDARD DRAWING**
**CONCRETE ENCASEMENT**

APPROVED
9-1, 1967
CITY ENGINEER

STANDARD PLAN
309