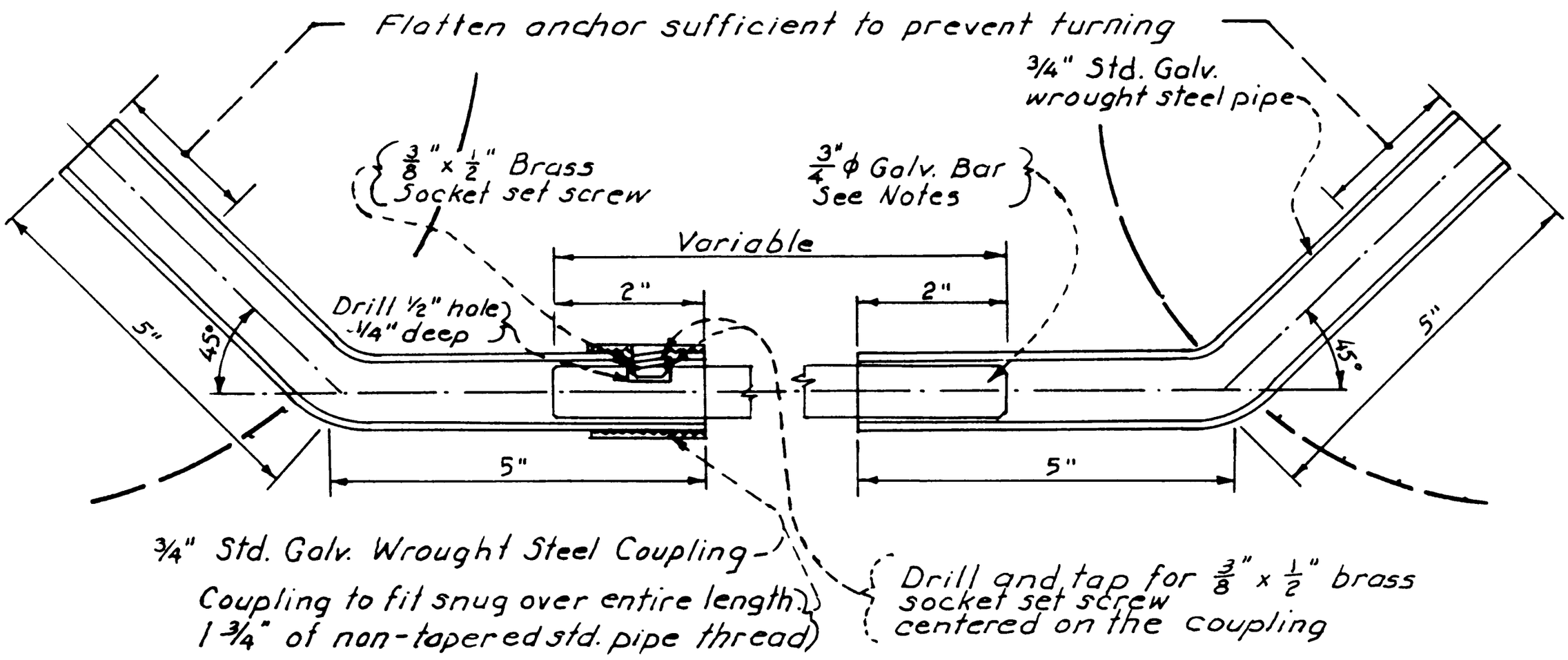

DETAIL OF ANCHOR

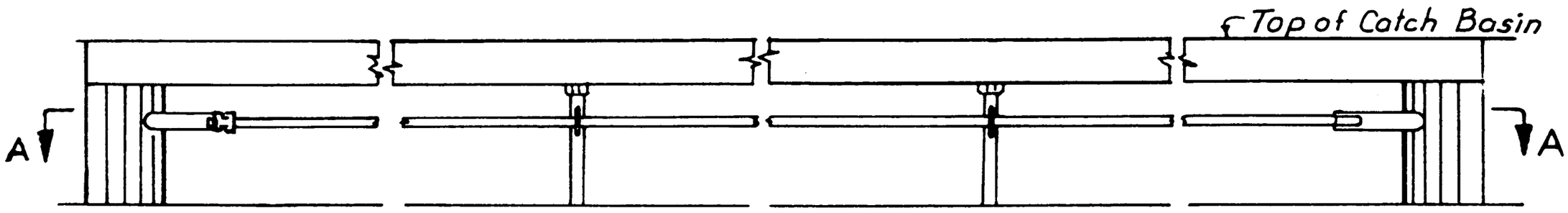

ELEVATION

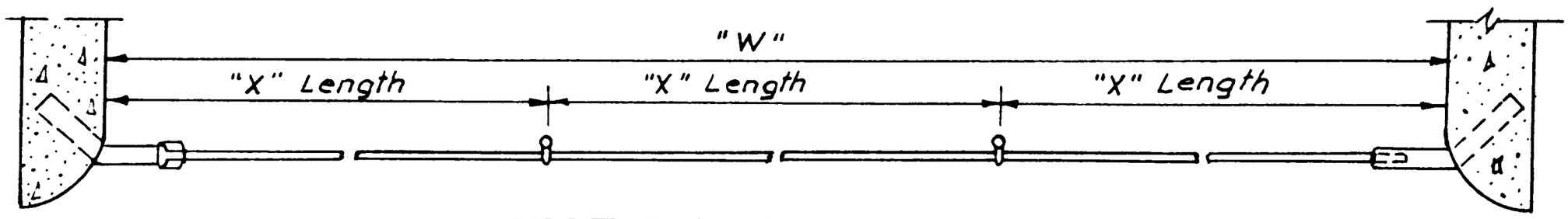

SECTION A-A

NOTES:

1. All bars shall be 3/4" Galv. hot rolled steel per A.S.T.M. Designation A-7-50T. Bar lengths shall not exceed 21', and shall be cut to fit in field. When "W" is over 21', protection bar shall consist of two or more sections depending upon length of basin. Location of special support bars and additional brass socket set screw shall be determined by the Engineer.

* When C.F. exceeds 16", place lower protection bar 6" below upper bar.

"W"	NUMBER OF BOLT SUPPORTS	NUMBER OF "X" LENGTHS
5' to 10'	1	2
10' to 15'	2	3
15' to 20'	3	4
20' to 25'	4	5
25' to 30'	5	6

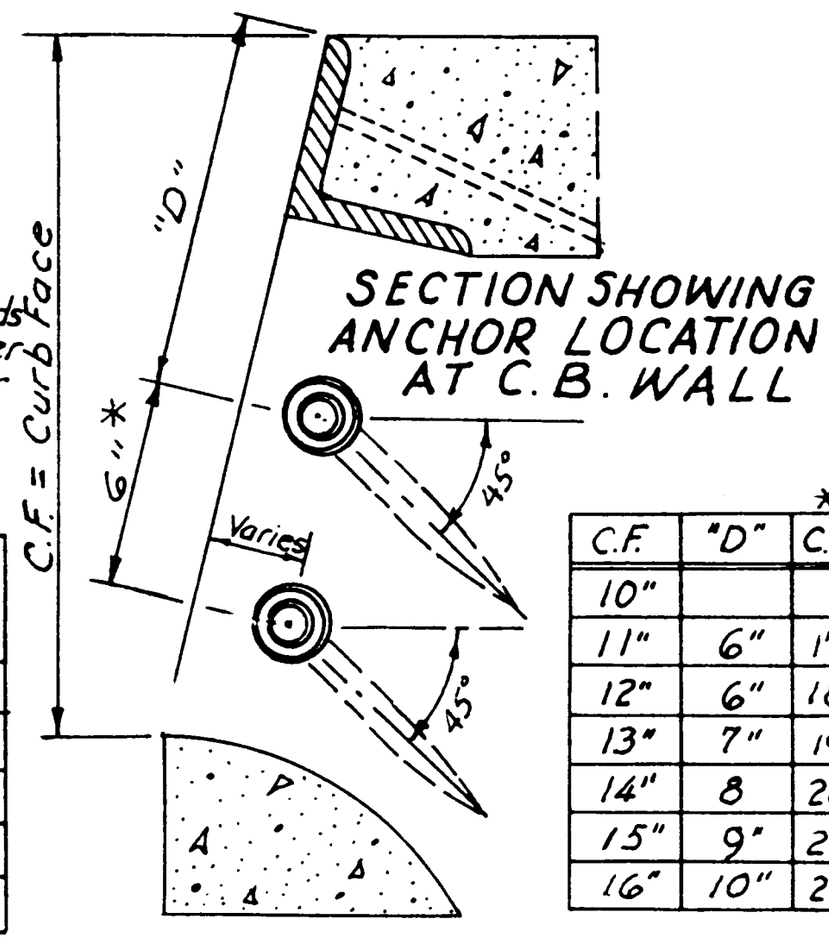

SECTION SHOWING ANCHOR LOCATION AT C.B. WALL

C.F.	"D"	C.F. *
10"		
11"	6"	17"
12"	6"	18"
13"	7"	19"
14"	8	20"
15"	9"	21"
16"	10"	22"

No.	Revision	Approved	DATE
Rev. 1	Revised Standard No.	[illegible]	[illegible]

CITY OF SAN BERNARDINO PUBLIC WORKS DEPT.

PROTECTION BAR FOR CATCH BASINS

APPROVED 6-9 1972

CITY ENGINEER

STANDARD PLAN 411