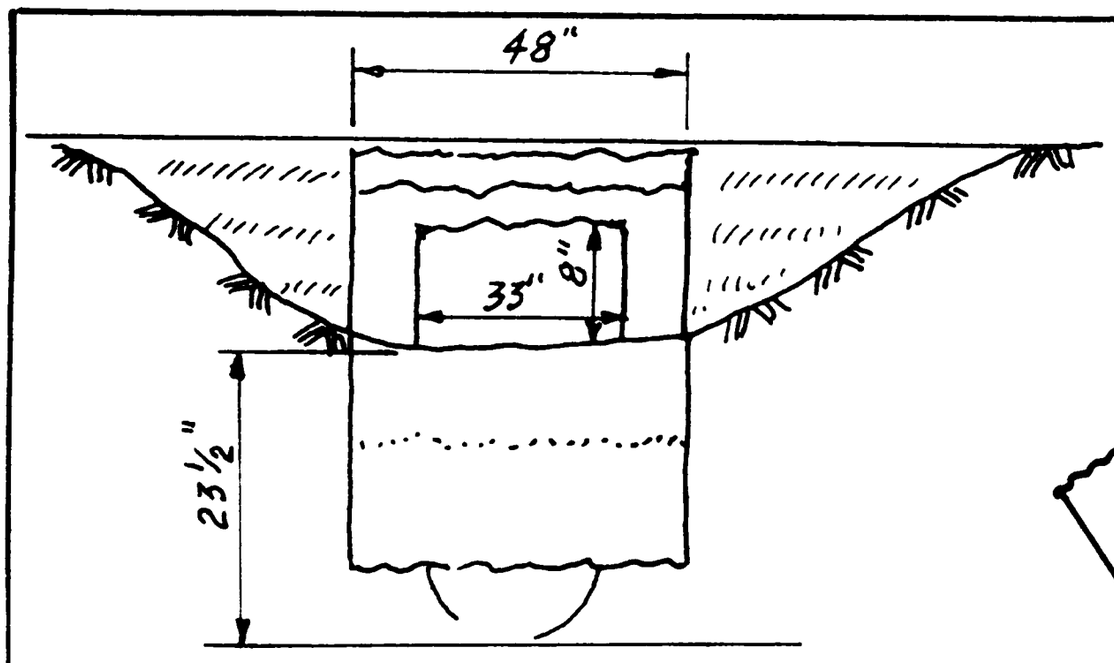

SECTION AA

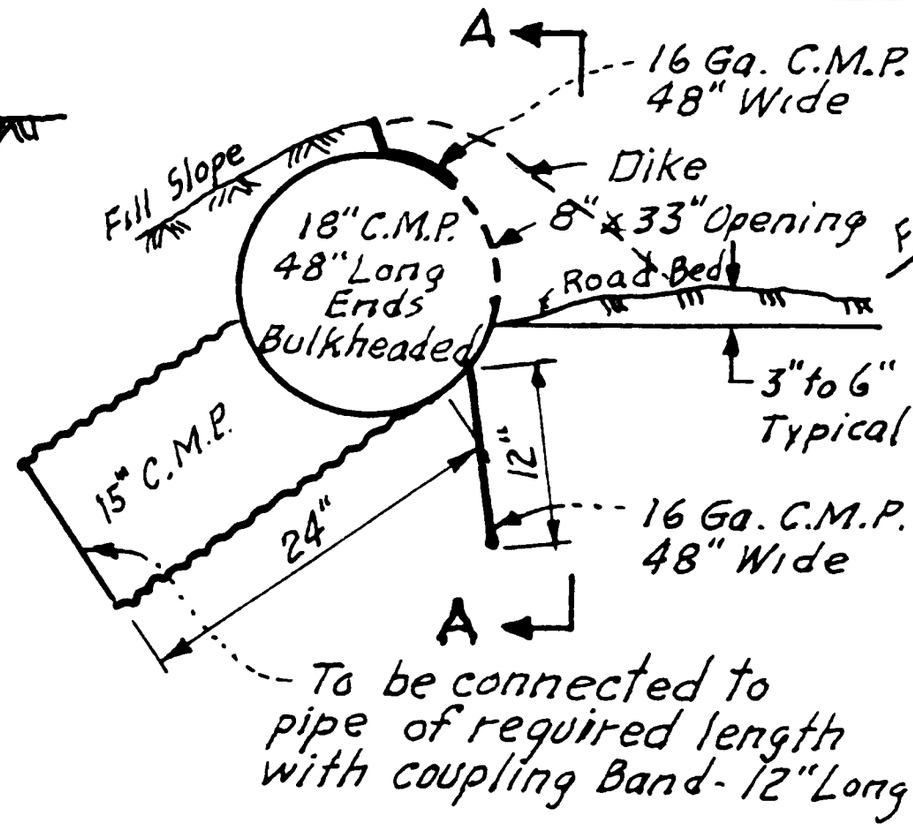

TYPE A INLET

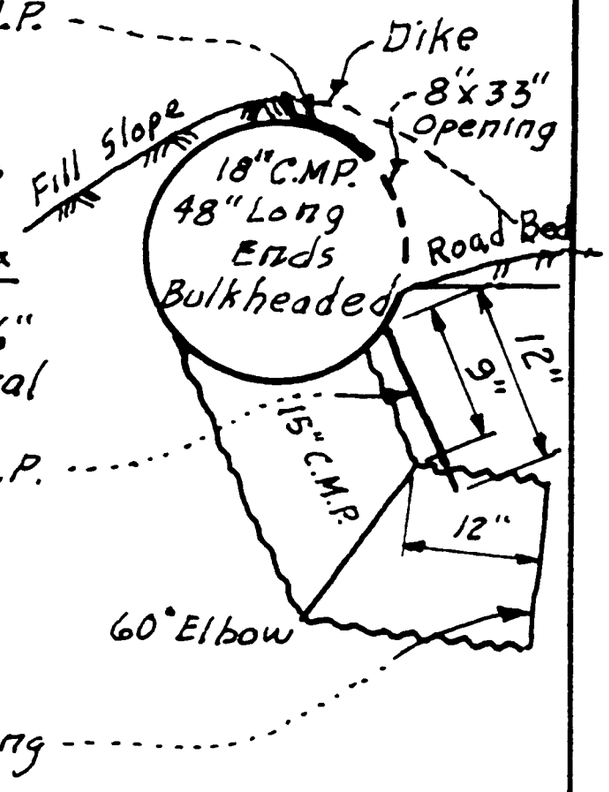

TYPE B INLET

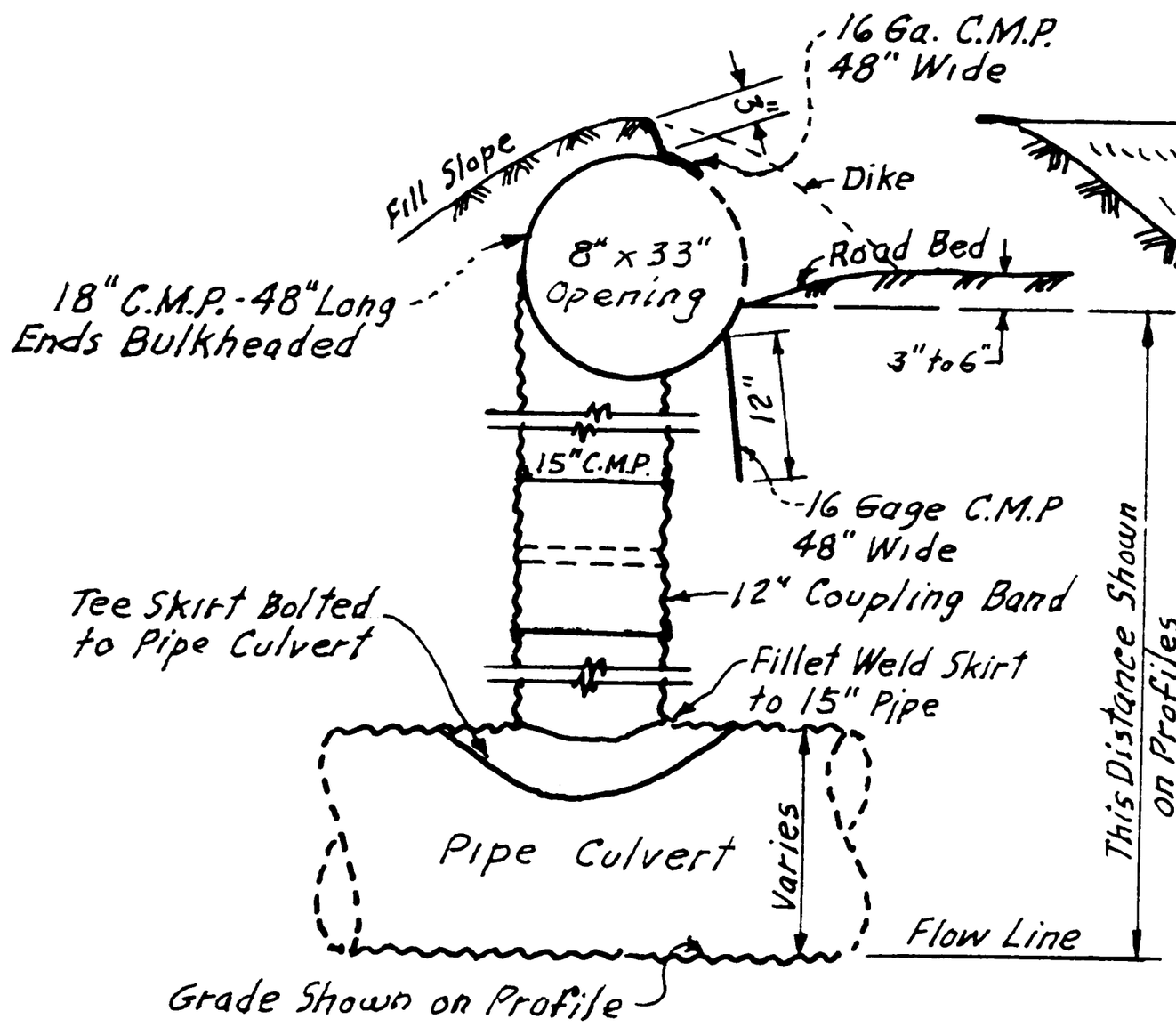

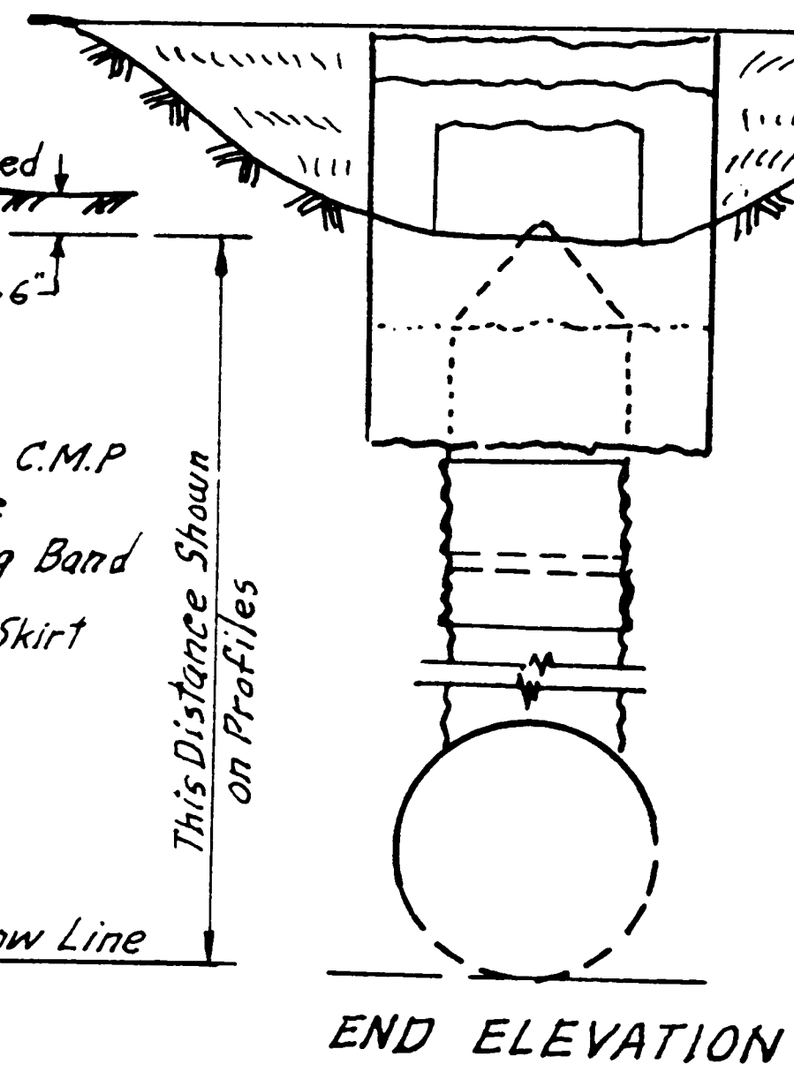

END ELEVATION

TYPE C INLET

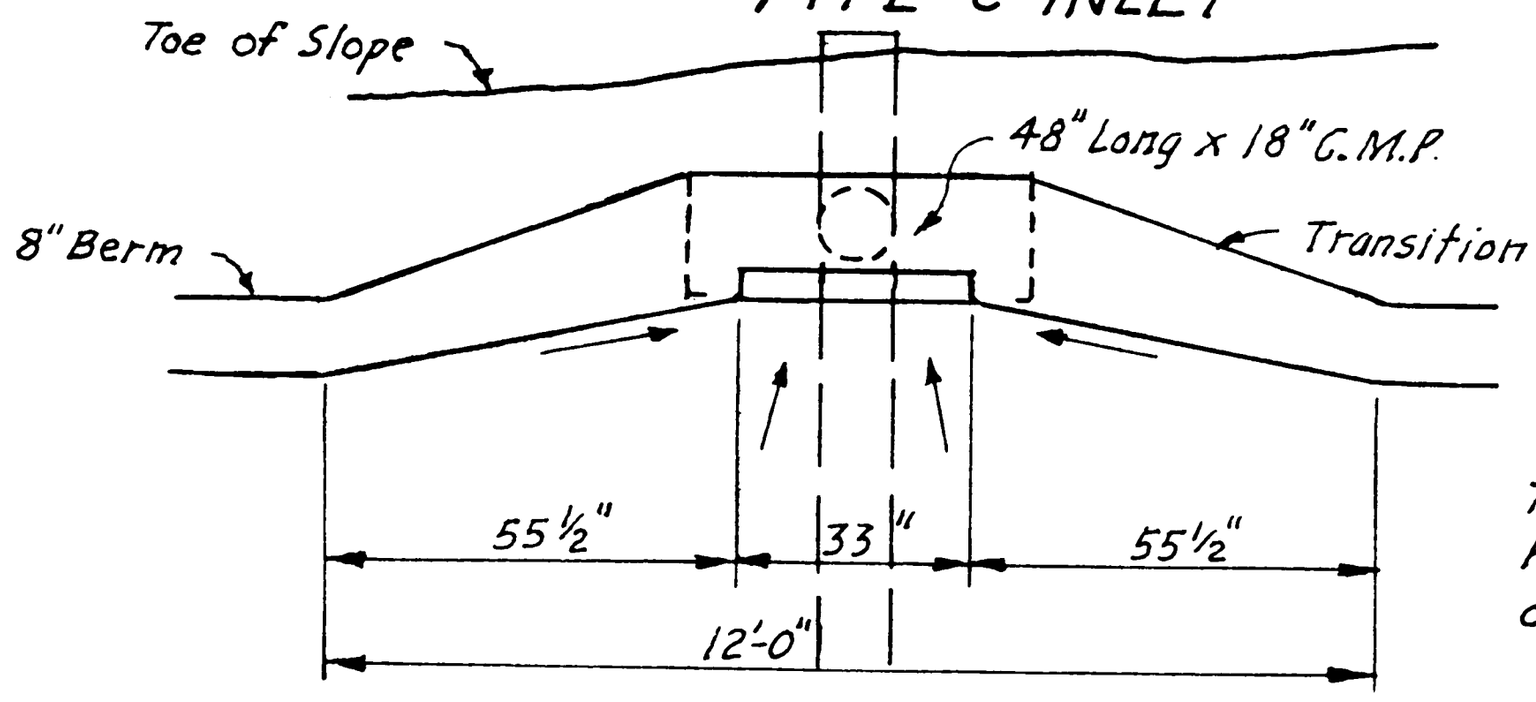

PLAN

Note:
This Standard applies to hillside areas and where called for on the plans.

REV. 1	Revised Standard No.	Appr. 5/24/78

CITY OF SAN BERNARDINO - PUBLIC WORKS DEPT.

STANDARD SPILLWAY INLETS

APPROVED:
10-1-6 P
CITY ENGINEER

STANDARD PLAN
417